TOSHIBA

FILE NO. 020-200414

SERVICE MANUAL

Color Television

34HFX84

DOCUMENT CREATED IN JAPAN, July, 2004

TABLE OF CONTENTS

CHAPTER 1 **GENERAL ADJUSTMENTS**

SAFETY INSTRUCTIONS 3
SET-UP ADJUSTMENT FOR FLAT TUBE 4
SERVICE MODE 6
ELECTRICAL ADJUSTMENTS 8
CIRCUIT CHECKS 10

CHAPTER 2 **SPECIFIC INFORMATIONS**

SETTING & ADJUSTING DATA 11
LOCATION OF CONTROLS 12
ADDING CHANNELS TO THE TV'S MEMORY 14
TROUBLE SHOOTING 15
CHASSIS AND CABINET REPLACEMENT PARTS LIST 16
PC BOARDS TOP AND BOTTOM VIEW 25
TERMINAL VIEW OF TRANSISTORS 39
CIRCUIT BLOCK DIAGRAM 42
SPECIFICATIONS ..... END
APPENDIX:
CIRCUIT DIAGRAM

CHAPTER 1 GENERAL ADJUSTMENTS

SAFETY INSTRUCTIONS

WARNING: BEFORE SERVICING THIS CHASSIS, READ THE "X-RAY RADIATION PRECAUTION", "SAFETY PRECAUTION" AND "PRODUCT SAFETY NOTICE" INSTRUCTIONS BELOW.

X-RAY RADIATION PRECAUTION

1. Excessive high voltage can produce potentially hazardous X-RAY RADIATION. To avoid such hazards, the high voltage must not be above the specified limit. The nominal value of the high voltage of this receiver is (A) kV at zero beam current (minimum brightness) under a 120V AC power source. The high voltage must not, under any circumstances, exceed (B) kV.

   Refer to table-1 for high voltage (A), (B).
   (See SETTING & ADJUSTING DATA on page 11)

   Each time a receiver requires servicing, the high voltage should be checked following the HIGH VOLTAGE CHECK procedure in this manual. It is recommended that the reading of the high voltage be recorded as a part of the service record. It is important to use an accurate and reliable high voltage meter.
2. This receiver is equipped with a Fail Safe (FS) circuit which prevents the receiver from producing an excessively high voltage even if the B+ voltage increases abnormally. Each time the receiver is serviced, the FS circuit must be checked to determine that the circuit is properly functioning, following the FS CIRCUIT CHECK procedure in this manual.
3. The only source of X-RAY RADIATION in this TV receiver is the picture tube. For continued X-RAY RADIATION protection, the replacement tube must be exactly the same type tube as specified in the parts list.
4. Some part in this receiver have special safety-related characteristics for X-RAY RADIATION protection. For continued safety, parts replacement should be undertaken only after referring to the PRODUCT SAFETY NOTICE below.

SAFETY PRECAUTION

WARNING : Service should not be attempted by anyone unfamiliar with the necessary precautions on this receiver. The following are the necessary precautions to be observed before servicing this chassis.

1. An isolation Transformer should be connected in the power line between the receiver and the AC line before any service is performed on the receiver.
2. Always discharge the picture tube anode to the CRT conductive coating before handling the picture tube. The picture tube is highly evacuated and if broken, glass fragments will be violently expelled. Use shatter proof goggles and keep picture tube away from the unprotected body while handling.
3. When replacing a chassis in the cabinet, always be certain that all the protective devices are put back in place, such as; non-metallic control knobs, insulating covers, shields, isolation resistor-capacitor network etc.
4. Before returning the set to the customer, always perform an AC leakage current check on the exposed metallic parts of the cabinet, such as antennas, terminals, screwheads, metal overlays, control shafts etc. to be sure the set is safe to operate without danger of electrical shock. Plug the AC line cord directly into a 120V AC outlet (do not use a line isolation transformer during this check). Use an AC voltmeter having 5000 ohms per volt or more sensitivity in the following manner:

   Connect a 1500 ohm 10 watt resistor, paralleled by a 0.15 µF, AC type capacitor, between a known good earth ground (water pipe, conduit, etc.) and the exposed metallic parts, one at a time. Measure the AC voltage across the combination of 1500 ohm resistor and 0.15 µF capacitor. Reverse the AC plug at the AC outlet and repeat AC voltage measurements for each exposed metallic part. Voltage measured must not exceed 0.3 volts rms. This corresponds to 0.2 milliamp. AC. Any value exceeding this limit constitutes a potential shock hazard and must be corrected immediately.

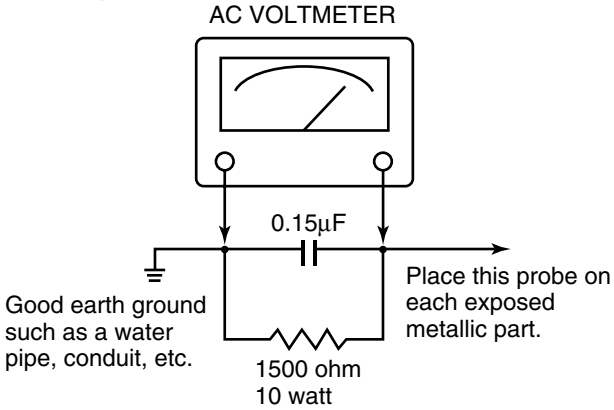

PRODUCT SAFETY NOTICE

Many electrical and mechanical parts in this chassis have special safety-related characteristics. These characteristics are often passed unnoticed by a visual inspection and the protection afforded by them cannot necessarily be obtained by using replacement components rated for higher voltage, wattage, etc. Replacement parts which have these special safety characteristics are identified in this manual and its supplements; electrical components having such features are identified by the international hazard symbols on the schematic diagram and the parts list.
Before replacing any of these components, read the parts list in this manual carefully. The use of substitute replacement parts which do not have the same safety characteristics as specified in the parts list may create shock, fire, X-ray radiation or other hazards.

WARNING: BEFORE SERVICING THIS CHASSIS, READ THE "X-RAY RADIATION PRECAUTION", "SAFETY PRECAUTION" AND "PRODUCT SAFETY NOTICE" ON PAGE 3 OF SERVICE MANUAL.

SET-UP ADJUSTMENT FOR FLAT TUBE

■ The following adjustments should be made when a complete realignment is required or a new picture tube is installed. Perform the adjustments in order as follows :

1. Color Purity
2. Convergence
3. White Balance

Note: The PURITY/CONVERGENCE MAGNET assembly and rubber wedges need mechanical positioning. Refer to figure 1.

COLOR PURITY ADUSTMENT

(1)Let the screen face in the installing direction or toward the east (when it is to be moved), bring up the service mode screen after demagnetizing (front, left, right, and top) with the degaussing coil, receive white signals by pressing the [TV/VIDEO] button, and then the receiver should be operated for more than 40 minutes.

(2)Perform rough adjustment of the central convergence with the P/C magnet according to the adjustment item.

(3)Receive built-in green signals, loosen set screws on the deflection yoke, remove rubber wedges, and shift the deflection yoke to toward front.

(4)Move alternately the two 2-pole magnets of the P/C magnets so that the green raster can come to the center of the screen.

Figure 1.

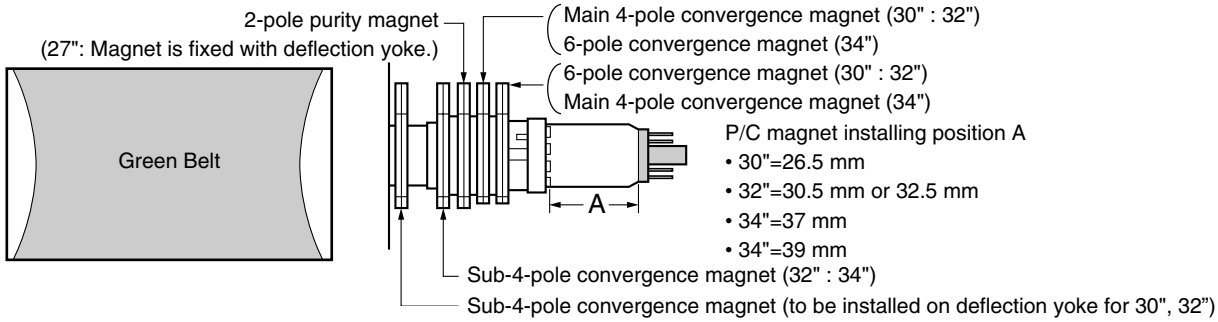

(5)Receive built-in red and blue signals, check that there is no inclination of the single color raster toward one side, and if each color tilts to a great extent, make adjustment with the 2-pole magnet so that the 3 colors will come to the center evenly.

(6)Receive the green raster, shift the deflection yoke from a foremost position (hitting against the picture tube) to a backward position horizontally, stop the deflection yoke at a position where it begins to become a green raster, and perform accurate marking on the picture tube.

(7)Shift the deflection yoke further backward, and perform accurate marking at a position where the green raster begins to being luck.

(8)Fix the deflection yoke at a position 60% forward within the range marked in items (6) and (7) above.

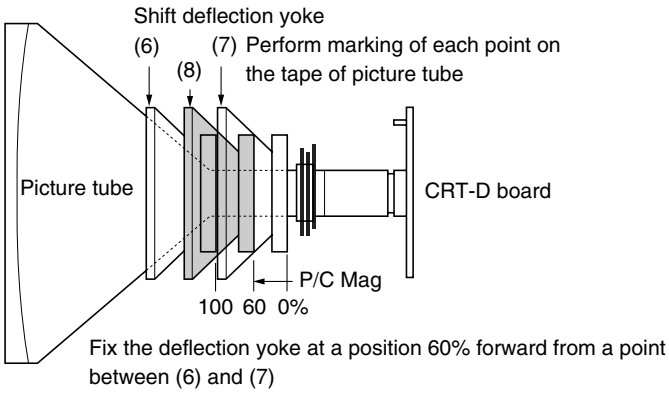

CONVERGENCE ADJUSTMENTS

* Adjust the convergence magnet to get vest convergence in the the order to (1) ~ (5).

■ CENTER CONVERGENCE:

(1)Receive the white crosshatch or dot pattern from the service signal generator.

(2)Use the 2 pieces of main 4-pole magnets of P/C magnets, change the open angle, and align the red and blue vertical lines on the screen center.

(3)Freeze the open angle of the main 4-pole magnets, turn them simultaneously, and align the horizontal lines.

(4)Take the same steps for items (2) and (3) above and align red/blue with green on the screen center using two 6-pole magnets.

(5)Adjust the sub-4-pole magnets only in case there is any deviation of Xv bow-shaped convergence. (To be usually set at the initial position)

Align both sides with the sub-4-pole magnets and minimize the deviation of blue and red with the main 4-pole magnets.

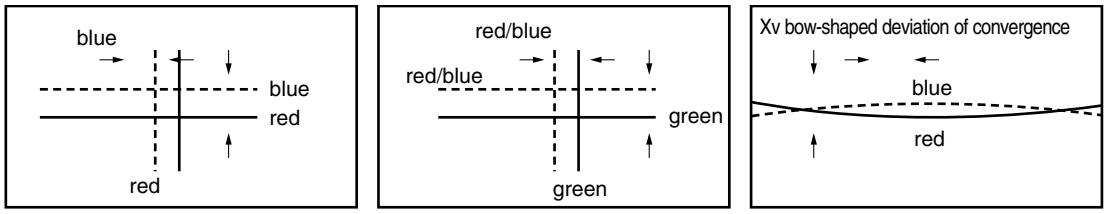

Main 4-pole magnet **6-pole magnet** **Sub-4-pole magnet**

■ CIRCUMFERENCE CONVERGENCE:

∗ Perform correction in the following manner.

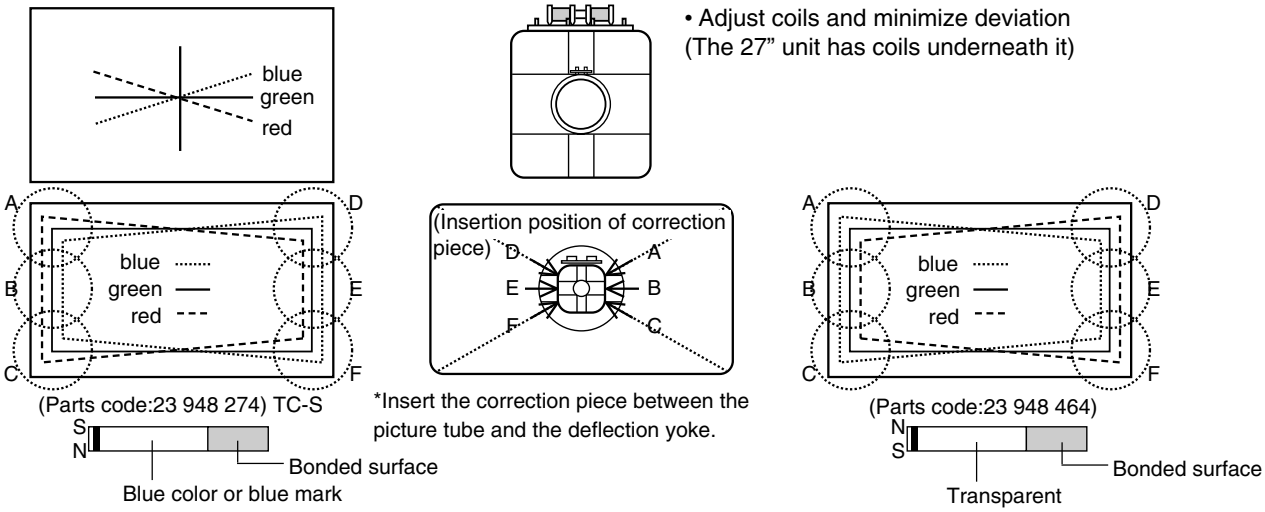

Adjust VR 1 and minimize the deviation of YH. *Only 27", 30" and 32".

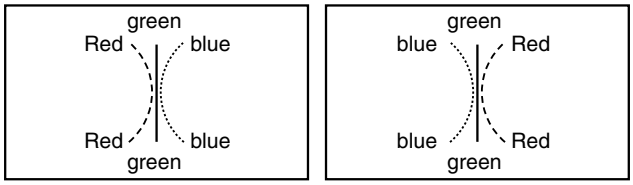

Adjust VR 2 (YHC) and minimize the deviation of YH.

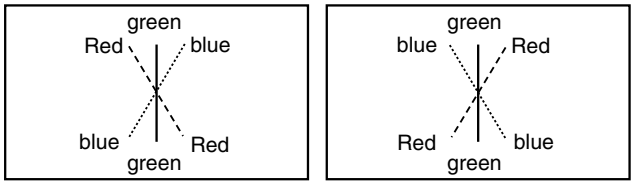

Adjust VR 3 (YV) and minimize the deviation of YV.

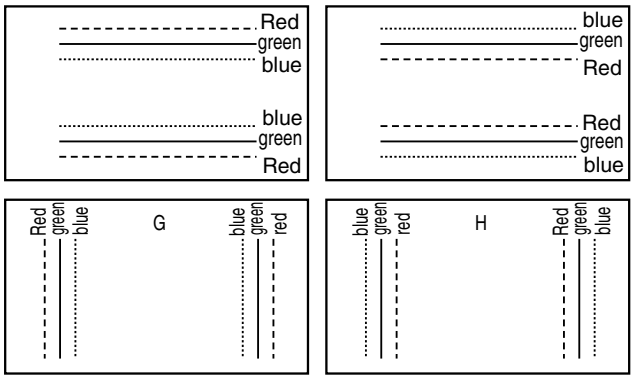

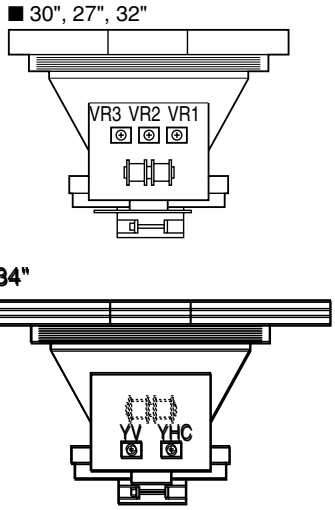

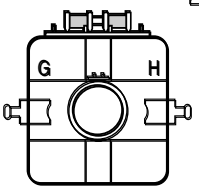

27" (Part No. 23 947 371)
32", 30" (Part No. 23 947 121)
34" (Part No. 23 993 080)

Perform correction by inserting the correction piece into the clearance of terminal board coils of the deflection yoke.

Note:

Perform insertion by turning the metal side to the terminal board side of the deflection yoke.

SERVICE MODE

1. ENTERING TO SERVICE MODE

1) Press MUTE button twice on Remote Control.
2) Press MUTE button again to keep pressing.
3) While pressing the MUTE button, press MENU button on TV set.

(Service mode display)

2. DISPLAYING THE ADJUSTMENT MENU

1) Press MENU button on TV.

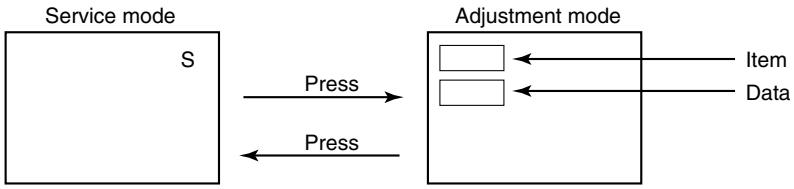

3. KEY FUNCTION IN THE SERVICE MODE

The following key entry during display of adjustment menu provides special functions.

Screen adjustment mode ON/OFF:	TV (ANT)/VIDEO button (on TV)
Selection of the adjustment items :	Channel ▲/▼ (on TV or Remote)
Change of the data value :	Volume ▲/▼ (on TV or Remote)
Adjustment menu mode ON/OFF :	MENU button (on TV)
Initialization of the memory (QA02) :	RECALL+Channel button on TV (▲)
Initialization of the self diagnostic data:	RECALL+Channel button on TV (▼)

“RCUT” selection :	1 button
“GCUT” selection :	2 button
“BCUT” selection :	3 button
“SCNT” selection :	4 button
“COLC” selection :	5 button
Self diagnostic display :	9 button

4. SELECTING THE ADJUSTING ITEMS

1) Every pressing of CHANNEL ▲ button in the service mode changes the adjustment items in the order of table-2. (▼ button for reverse order)

Refer to table-2 for preset data of adjustment mode.
(See SETTING & ADJUSTING DATA on page 11)

5. ADJUSTING THE DATA

1) Pressing of VOLUME ▲ or ▼ button will change the value of data in the range from 00H to FFH. The variable range depends on the adjusting item.

6. EXIT FROM SERVICE MODE

1) Pressing POWER button to turn off the TV once.

■ INITIALIZATION OF MEMORY DATA OF QA02

After replacing QA02, the following initialization is required.

1. Enter the service mode, then select any register item.
2. Press and hold the RECALL button on the Remote, then press the CHANNEL ▲ button on the TV. The initialization of QA02 has been complated.
3. Check the picture carefully. If necessary, adjust any adjustment item above.
   Perform “Programming Channel Memory” on the owner's manual.

CAUTION: Never attempt to initialize the data unless QA02 has been replaced.

7. SELF DIAGNOSTIC FUNCTION

1) Press “9” button on Remote Control during display of adjustment menu in the service mode.
   The diagnosis will begin to check if interface among IC’s are executed properly.
2) During diagnosis, the following displays are shown.

```
   SELF CHECK
①  NO. 23 * * * * * *
②  POWER     : 000
③  BUS LINE  : OK
④  BUS CONT : OK
⑤  BLOCK : MAIN  SUB
⑥  SET ID : 01
⑦  EEP VER : 02
⑧  OPT1 : 05      OPT2 : 70
     HDMI
⑨  NO * * * * * * * *
⑩  ERR CODE : ○○
```

① Part number of microprocessor (QA01)
② Operation number of protection circuit (current limiter) . . . . “000” is normal.
③ BUS line check
- “OK” ..... Normal
- “SCL-GND” or “NG” ..... SCL-GND short circuit
- “SDA-GND” or “NG” ..... SDA-GND short circuit
- “SCL-SDA” or “NG” ..... SCL-SDA short circuit

④ BUS line ACK (acknowledge) check
- “OK” ..... Normal
- Display of Location Number . . . . NG
- (Display example)
- “QA02 NG”, “H001 NG”, “Q501 NG” etc.
- Note: The indication of failure place is only one place though failure places are plural. When repair of a failure place finishes, the next failure place is indicated. (The order of priority of indication is left side.)

⑤ Sync. signal check
- Green display ..... Normal
- Red display ..... NG
  - MAIN ..... Main sync
  - SUB ..... Sub sync (when turn on the PIP)

⑥ ID code for TV Set
⑦ Version of "EEP"
⑧ Data for "OPT"
⑨ Part number of HDMI microprocessor
⑩ HDMI error code

ELECTRICAL ADJUSTMENTS

ITEM	ADJUSTMENT PROCEDURE
FOCUS VR ADJ	1. Enter the service mode, then select any register item. 2. Press the TV/VIDEO button on the Remote until the black cross-bar pattern appears on the screen. 3. Adjust the FOCUS control (on T461) for well defined scanning lines on the picture screen.
SUB-BRIGHTNESS (BRTC)	1. Constrict the picture height until the vertical retrace line appears adjusting the item HIT (HEIGHT). 2. Adjust the CONTRAST control to the minimum. 3. Call up the adjustment mode display, then select the item **BRTC**. 4. Press the VOLUME ▲ or ▼ button so the belt of vertical retrace line just disappear. 5. Adjust the CONTRAST control for the desired contrast. 6. Perform the HEIGHT adjustment. 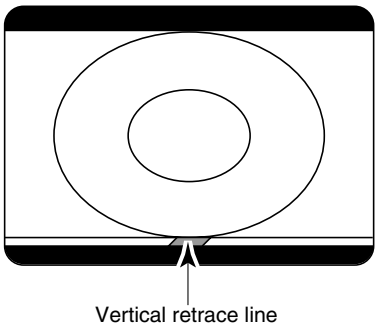
WIDTH (WID)	1. Call up the adjustment mode display, then select the item **WID**. 2. Press the VOLUME ▲ or ▼ button to get the picture so the left and right edges of raster begins to lack. 3. Press the VOLUME ▲ or ▼ button to advance the data by 7 steps. Note : Check the horizontal picture position is correct.

ITEM	ADJUSTMENT PROCEDURE
E-W PARABOLA (DPC) (PARA)	1. Call up the adjustment mode display, then select the item **PARA**. 2. Press the TV/VIDEO button on Remote until the cross-hatch pattern appears on the screen. 3. Press the VOLUME ▲ or ▼ button to make vertical lines straight as shown below. 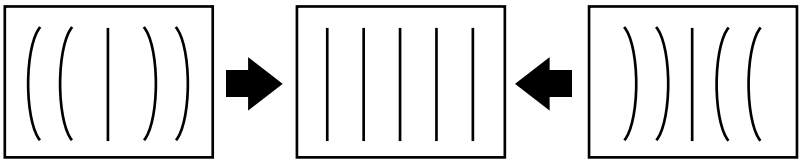
HORIZONTAL POSITION (HPOS) VERTICAL POSITION (VPOS)	1. Call up the adjustment mode display, then select the item **HPOS** or **VPOS**. 2. Press the TV/VIDEO button on Remote until the white cross-bar or black cross-bar pattern appears on the screen. 3. Adjust the HORIZONTAL and VERTICAL position alternately by pressing the VOLUME ▲ or ▼ button for proper picture position. 4. Check the picture with off-air signal. 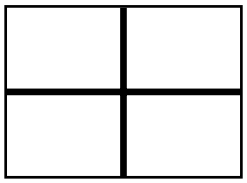
HEIGHT (HIT)	1. Call up the adjustment mode display, then select the item **HIT**. 2. Press the VOLUME ▲ or ▼ button to get the picture so the top of raster begins to lack. 3. Press the VOLUME ▲ button to advance the data by 9 steps. Note : Check the vertical picture position is correct.
WHITE BALANCE (RCUT) (GCUT) (BCUT) (GDRV) (BDRV)	1. Adjust the CONTRAST control to the center, and BRIGHTNESS control to the maximum. 2. Call up the adjustment mode display, and press the TV/VIDEO button on Remote until the white and black pattern appears on the screen. 3. Adjust the following items with the CHANNEL ▲/▼ and VOLUME ▲/▼ buttons. Item : RCUT ⟶ Data : 40H Item : GCUT ⟶ Data : 40H Item : BCUT ⟶ Data : 40H Item : GDRV ⟶ Data : 40H Item : BDRV ⟶ Data : 40H 4. Press the TV/VIDEO button on TV to display a single horizontal line on the screen. 5. Turn the SCREEN control (FBT) fully counterclockwise and gradually rotate clockwise until the first horizontal line appears slightly on the screen. 6. Press the TV/VIDEO button to display the normal picture. 7. Adjust the remaining two “?CUT” items (CHANNEL ▲/▼ → TV/VIDEO → VOLUME ▲/▼ in order) to obtain the slightly lighted horizontal line in the same levels of three (red, green, blue) colors. The line should be white if the adjustments are proper. 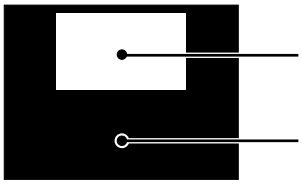 Bright area Adjust "GDRV" or "BDRV" to be white. Dark area Fine adjust "RCUT", "GCUT" or "BCUT" to be black.

CIRCUIT CHECKS

HIGH VOLTAGE CHECK

CAUTION: There is no HIGH VOLTAGE ADJUSTMENT on this chassis. Checking should be done following the steps below.

1. Connect an accurate high voltage meter to the second anode of the picture tube.
2. Turn on the receiver. Set the BRIGHTNESS and CONTRAST controls to minimum (zero beam current).
3. High voltage must be measured below (B) kV.

   Refer to table-1 for high voltage (B).
   (See SETTING & ADJUSTING DATA on page 11)
4. Vary the BRIGHTNESS control to both extremes to be sure the high voltage does not exceed the limit under any conditions.

FS CIRCUIT CHECK

The Fail Safe (FS) circuit check is indispensable for the final check in servicing. Checking should be done following the steps below.

1. Turn the receiver on and press the RESET button.
2. Temporarily short TP-(R) and TP-(X) with a jumper wire. Raster and sound will disappear.
3. The receiver must remain in this state even after removing the jumper wire. This is the evidence that the FS circuit is functioning properly.
4. To obtain a picture again, temporarily turn the receiver off and allow the FS circuit more than 5 seconds to reset. Then turn the power switch on to produce a normal picture.

Troubleshooting Guide for Fail Safe Circuit

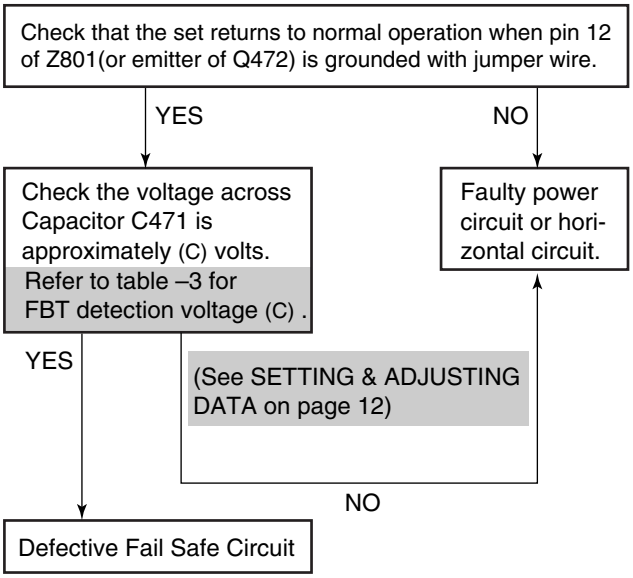

SETTING & ADJUSTING DATA

【SAFETY INSTRUCTIONS】

		34"
HIGH VOLTAGE AT ZERO BEAM:	(A)	30.0 kV
MAX HIGH VOLTAGE:	(B)	35.0 kV

Table-1

【SERVICE MODE】

ADJUSTING ITEMS AND DATA IN THE SERVICE MODE:

Item	Name of adjustment	Preset	NORMAL & FULL
RCUT	R CUT OFF	40H	←
GCUT	G CUT OFF	40H	←
BCUT	B CUT OFF	40H	←
GDRV	G DRIVE	40H	←
BDRV	B DRIVE	40H	←
BRTC	BRIGHT CENTER	80H	←
UVTT	TINT CENTTER	46H	←
HIT	PICTURE HIT	2FH	←

Item	Name of adjustment	Preset	NORMAL & FULL
LIN	V-LINEARITY	12H	←
WID	PICTURE WIDTH	3DH	←
PARA	E-W PARABOLA	15H	←
CNR	EW M CORRECTION	17H	←
TRAP	EW TRAPEZIUM	3CH	←
HPOS	H-POSITION	4CH	←
TCNR	EW TOP CORNER	10H	←
BTNR	EW BOTTOM COR	10H	←

Table-2

【CIRCUIT CHECKS】

FBT DETECTION VOLTAGE	(C)	20.1 V

Table-3

LOCATION OF CONTROLS

TV Front

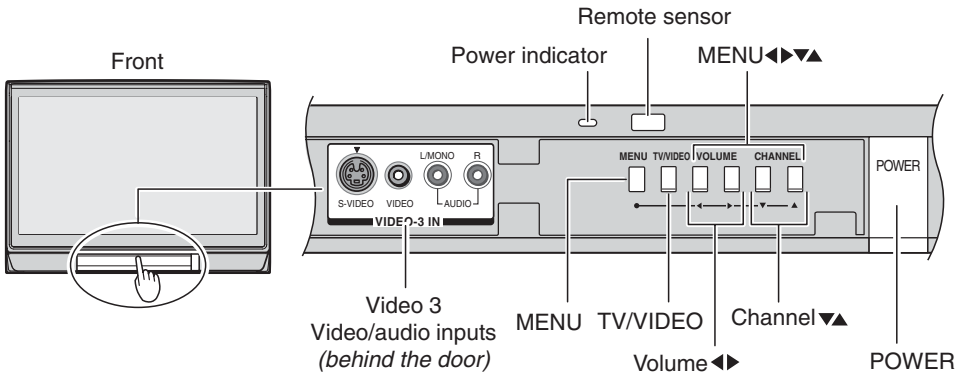

TV Rear

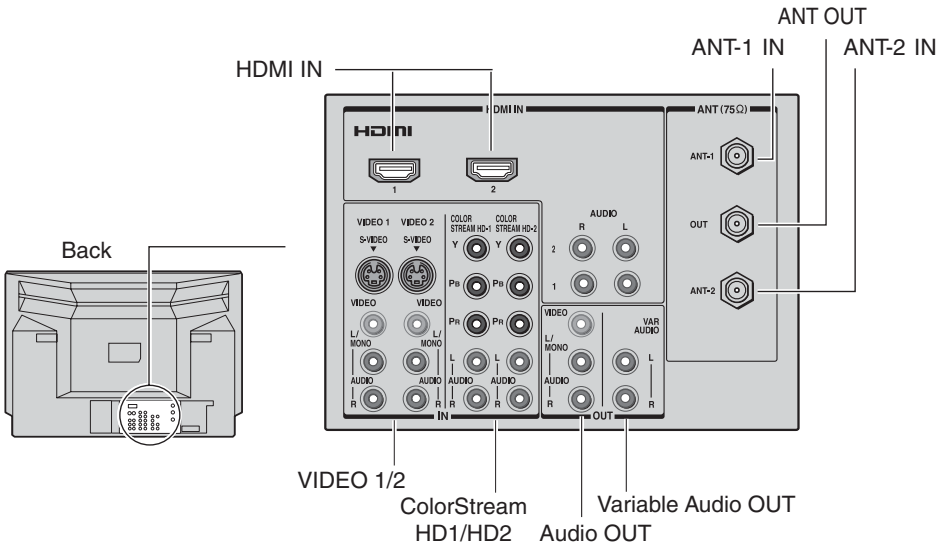

Remote Control

POWER turns the TV on and off

SLEEP allows access to the automatic TV shut-off function

LIGHT The first press of the LIGHT button lights the keypad and turns on the Illumination mode. With the Illumination mode on, pressing any other key lights the keypad for 5 seconds (10 seconds if you're in programming mode).
Subsequent presses of the LIGHT button toggle between turning the Illumination mode on and off.

Channel Numbers (0-9, 100) allow direct access to channels

MODE cycles through the six device modes: TV, CABLE/SAT, VCR, DVD, AUDIO1, and AUDIO2. The mode indicator light will remain lit for a few seconds.

PIC SIZE cycles through the five pictures sizes: Natural, Theater Wide 1, 2, 3, and Full

FAVORITE allows access to the favorite channel search function

MENU allows access to on-screen programming menus

ENTER sets programming menu information

▲▼ ◄► select or adjust programming menus

FAV ▲▼cycles through favorite channels

CH ▲▼ cycles through programmed channels

VOL ▲▼ adjusts the volume level

EXIT exits the programming menus

INPUT selects the video input source

MUTE mutes the sound

RECALL displays on-screen information

CH RTN returns to the last viewed channels

POP CH ▲▼ selects the POP (picture-out-picture) channel

SPLIT turns the POP feature on and off

CH SCAN allows access to the programmed channel search function

FREEZE freezes the picture. Press again to restore the picture.

SWAP switches the main and POP pictures

POP DIRECT CH allows direct access to POP channels

SOURCE selects the POP picture source

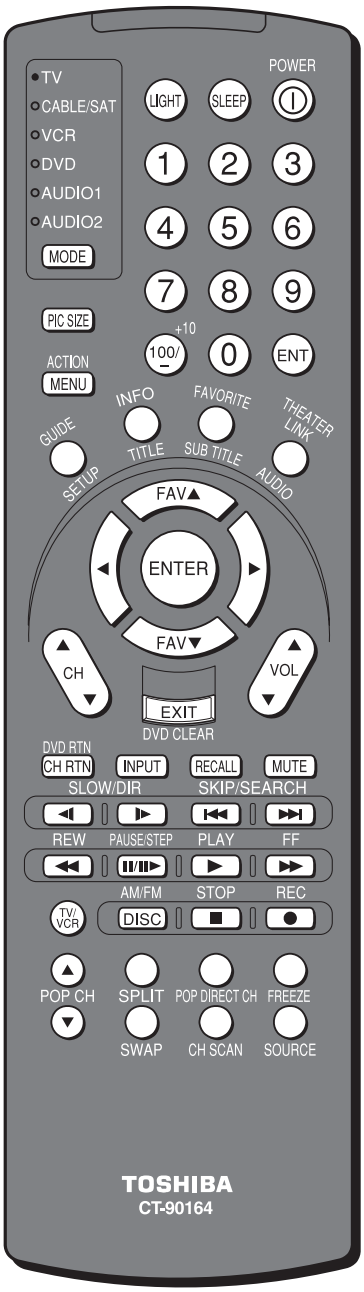

Note:
The error message "Not Available" will appear if you press a key for a function that is not available.

ADDING CHANNELS TO THE TV'S MEMORY

When you press Channel ▲ or ▼, your TV will stop only on the channels stored in the TV's channel memory. Follow the steps below and on the this page to program all active channels into the TV's memory.

Programming channels automatically

Your TV can automatically detect all active channels in your area and store them in its memory. After the channels are stored automatically, you can manually add or erase individual channels .
To program channels automatically:

1. Press MENU, and then press ◀ or ▶ until the SET UP menu appears.
2. Press ▲ or ▼ until the TV/CABLE is highlighted, and then press ENTER to display the pull-down menu.
3. Press ▲ or ▼ to highlight either TV or CABLE, depending on which you use. If you use an antenna, highlight TV; if you use cable, highlight CABLE.
4. Press ENTER.
5. Press ▼ to select CH PROGRAM.
6. Press ENTER to start channel programming. The TV will automatically cycle through all the TV or Cable channels (depending on which you selected), and store all active channels in the channel memory.
   While the TV is cycling through the channels, the message "Programming Now"–Please Wait" appears.
7. When channel programming is complete,the message "Completed" appears.
8. Press Channel ▲ or ▼ to view the programmed channels.

Adding and erasing channels manually

After you have programmed the channels automatically, you can manually add or erase specific channels.
To add or erase channels:

1. Select the channel you want to add or erase. If you are adding a channel, you must select the channel using the Channel Number buttons.
2. Press MENU, and then press ◀ or ▶ until the SET UP menu appears.
3. Press ▲ or ▼ to highlight ADD/ERASE, and then press ENTER to display the pull-down menu.
4. Press ▲ or ▼ to select ADD or ERASE, depending on the function you want to perform.
5. Repeat steps 1-4 for other channels you want to add or erase.

TROUBLE SHOOTING

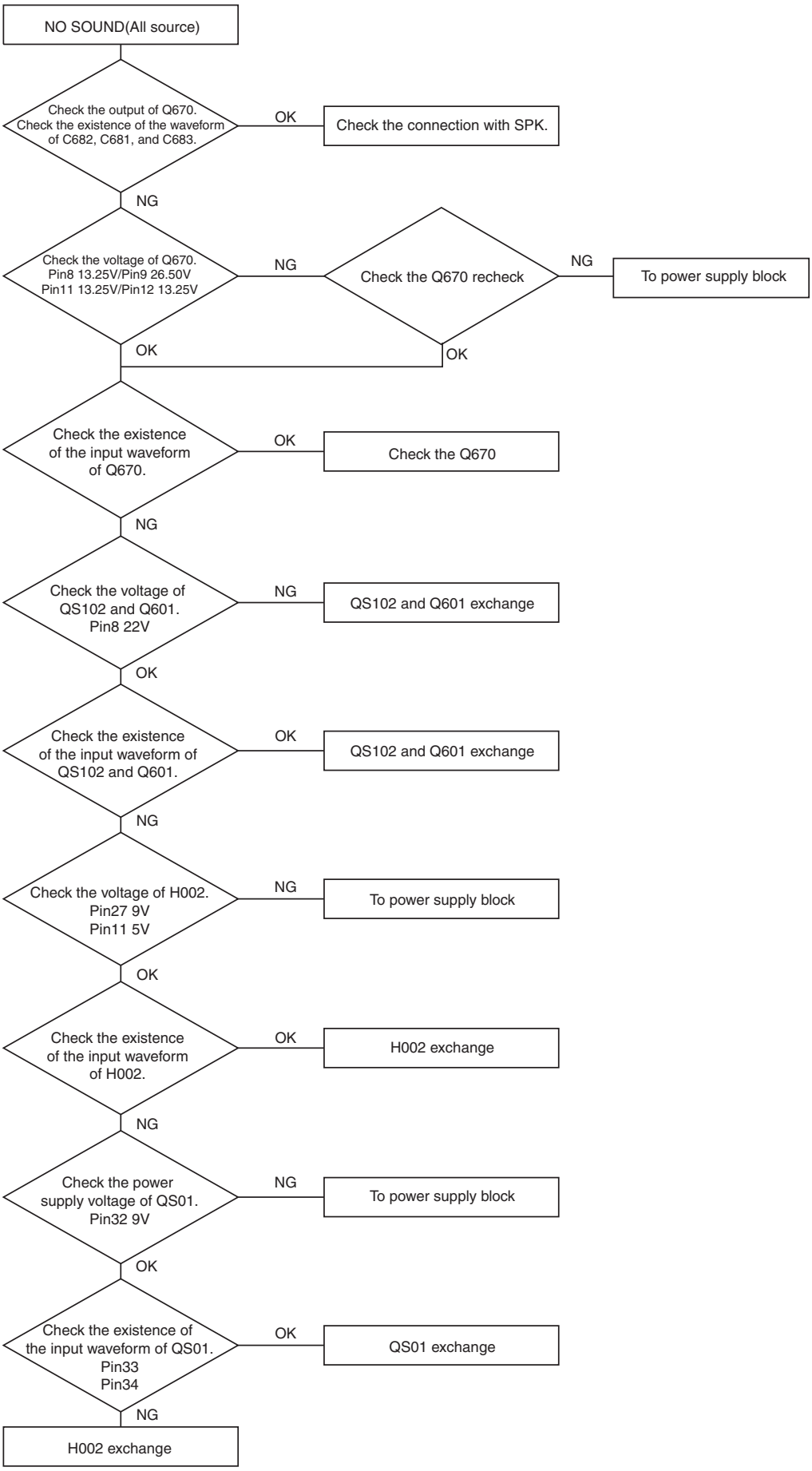

CHASSIS AND CABINET REPLACEMENT PARTS LIST

WARNING: BEFORE SERVICING THIS CHASSIS, READ THE "X-RAY RADIATION PRECAUTION", "SAFETY PRECAUTION" AND "PRODUCT SAFETY NOTICE" ON PAGE 3 OF THIS MANUAL.

CAUTION: The international hazard symbols "⚠" in the schematic diagram and the parts list designate com-ponents which have special characteristics important for safety and should be replaced only with types identical to those in the original circuit or specified in the parts list. The mounting position of replacements is to be identical with originals. Before replacing any of these components, read carefully the PRODUCT SAFETY NOTICE. Do not degrade the safety of the receiver through improper servicing.

NOTICE:
- *The part number must be used when ordering parts, in order to assist in processing, be sure to include the Model number and Description.*
- *The PC board assembly with * mark is no longer available after the end of the production.*

Model : 34HFX84

Capacitors	CD	:	Ceramic Disk	PF	:	Plastic Film	EL	: Electrolytic
Resistors	CF	:	Carbon Film	CC	:	Carbon Composition	MF	: Metal Film
	OMF	:	Oxide Metal Film	VR	:	Variable Resistor	FR	: Fusible Resistor

(All CD and PF capacitors are ±5%, 50V and all resistors, ±5%, 1/6W unless otherwise noted.)

Location No.	Parts No.	Description
CAPACITORS		
C101	24797339	ELECTROLYTIO CE04G, 50V 3.3UF M
C102	24665221	ELECTROLYTIC CE04Q, 10V 220UF M 3A
C105	24100102	CERAMIC CHIP, 50V F 1000PF Z
C106	24669479	ELECTROLYTIC, 50V 4.7UF M 3A
C107	24666221	ELECTROLYTIC 04Q, 16V 220UF M 3A
C108	24665221	ELECTROLYTIC CE04Q, 10V 220UF M 3A
C109	24100104	CERAMIC CHIP, 25V F 0.1UF Z
C110	24794101	ELECTROLYTIC, 16V 100UF M
C301	24567104	PLASTIC FILM, 50V 0.1UF J
C302	24567224	PLASTIC FILM, 50V 0.22UF J
C304	24082991	PLASTIC FILM, 250V 0.22 UF J
C305	24109822	CERAMIC CHIP, 50V B 8200PF K
C306	24669101	ELECTROLYTIC, 50V 100UF M 3A
C307	24666471	ELECTROLYTIC 04Q, 16V 470UF M 3A
C308	24109472	CERAMIC CHIP, 50V B 4700PF K
C309	24109471	CERAMIC CHIP, 50V B 470PF K
C310	24667102	ELECTROLYTIC, 25V 1000UF M 3A
C311	24109102	CERAMIC CHIP, 50V B 1000PF K
C313	24214561	CERAMIC DISC, 500V B 560PF K
C314	24667101	ELECTROLYTIC CE04Q, 25V 100UF M 3A
C315	24092883	CERAMIC CHIP CK73B 50V 0.1UF K
C317	24567104	PLASTIC FILM, 50V 0.1UF J
C319	24092883	CERAMIC CHIP CK73B 50V 0.1UF K
C320	24667101	ELECTROLYTIC CE04Q, 25V 100UF M 3A
C322	24539105	PLASTIC FILM, 50V 1UF J
C323	24539684	PLASTIC FILM, 50V 0.68UF J
C325	24591203	PLASTIC FILM, 50V 0.02UF J
C326	24669010	ELECTROLYTIC, 50V 1UF M 3A
C327	24073041	ELECTROLYTIC, 16V 470UF M 3A
C329	24503334	PLASTIC FILM CF92 T 250V 1R5UF J
C330	24539105	PLASTIC FILM, 50V 1UF J
C332	24109473	CERAMIC CHIP, 25V B 0.047UF K
C333	24108330	CERAMIC CHIP, 50V SL 33PF J
C334	24109471	CERAMIC CHIP, 50V B 470PF K
C336	24108101	CERAMIC CHIP, 50V SL 100PF J
C337	24092614	CERAMIC CHIP CK732B 16V 150000PF K
C341	24214101	CERAMIC DISC, 500V B 100PF K
C342	24214101	CERAMIC DISC, 500V B 100PF K
C362	24591682	PLASTIC FILM, 50V 6800PF J
C370	24666100	ELECTROLYTIC, 10V 10UF M 3A

Location No.	Parts No.	Description
C413	24214392	CERAMIC DISC, 500V B 3900PF K
C416	24676330	ELECTROLYTIC, 100V 33UF M 3A
C417	24214391	CERAMIC DISC, 500V B 390PF K
C418	24667221	ELECTROLYTIC CE04Q, 25V 220UF M 3A
C419	24590102	PLASTIC FILM, 50V 1000PF J
⚠C428	24503192	PLASTIC FILM, 400V 0.15UF J
C430	24539334	PLASTIC FILM, 50V 0.33UF J
C431	24539104	PLASTIC FILM, 50V 0.1UF J
C432	24666100	ELECTROLYTIC, 10V 10UF M 3A
C439	24503457	PLASTIC FILM CQ92 T 400V 56000PF J
⚠C442	24503190	PLASTIC FILM, 400V 0.12UF J
⚠C443	24503348	PLASTIC FILM 1800VH 3900PF H
⚠C444	24503195	PLASTIC FILM, 1800VH 5100PF H
C445	24095804	PLASTIC FILM, 400V 0.056UF J
C446	24073120	ELECTRPLYTIC, 250V 33UF, 250YXF33M
C448	24073118	ELECTROLYTIC, 160V 33UF M
C450	24214222	CERAMIC DISC, 500V B 2200PF K
C451	24214222	CERAMIC DISC, 500V B 2200PF K
C452	24820103	PLASTIC FILM, 630V 0.01UF J
⚠C461	24820123	PLASTIC FILM, 630V 0.012UF J
C464	24503149	PLASTIC FILM, 250V 3.3UF
C465	24591183	PLASTIC FILM, 50V 0.018UF J
C466	24679220	ELECTROLYTIC, 250V 22UF M 3A
⚠C467	24820123	PLASTIC FILM, 630V 0.012UF J
C468	24591823	PLASTIC FILM, 50V 0.082UF J
C469	24591821	PLASTIC FILM, 50V 820PF J
C470	24766220	ELECTROLYTIC 04G, 50V 22UF M
C471	24766479	ELECTROLYTIC, 50V 4.7UF M
C472	24539474	PLASTIC FILM, 50V 0.47UF J
C476	24214471	CERAMIC DISC, 500V B 470PF K
C477	24666220	ELECTROLYTIC, 16V 22UF M 3A
C488	24666100	ELECTROLYTIC, 10V 10UF M 3A
C489	24212103	CERAMIC DISC, 50V B 10000PF K
C499	24829333	PLASTIC FILM, 400V 0.033UF J
C601	24073082	ELECTROLYTIC, 50V 2.2UF M 3A
C602	24591102	PLASTIC FILM, 50V 1000PF J
C603	24669101	ELECTROLYTIC, 50V 100UF M 3A
C605	24109103	CERAMIC CHIP, 50V B 0.01UF K
C607	24797470	ELECTROLYTIC 04G, 50V 47UF M
C613	24666471	ELECTROLYTIC 04Q, 16V 470UF M 3A
C615	24666220	ELECTROLYTIC, 16V 22UF M 3A

Location No.	Parts No.	Description
C660	24073034	ELECTROLYTIC, 16V 10UF M 3A
C661	24073083	ELECTROLYTIC CE04P 50V 3.3UF M 3A
C662	24073083	ELECTROLYTIC CE04P 50V 3.3UF M 3A
C663	24590471	PLASTIC FILM, 50V 470PF J
C664	24590471	PLASTIC FILM, 50V 470PF J
C665	24797339	ELECTROLYTIO CE04G, 50V 3.3UF M
C666	24590823	PLASTIC FILM, 50V 0.082UF J
C671	24073083	ELECTROLYTIC CE04P 50V 3.3UF M 3A
C672	24073083	ELECTROLYTIC CE04P 50V 3.3UF M 3A
C673	24073084	ELECTROLYTIC, 50V 4.7UF M 3A
C675	24667470	ELECTROLYTIC CE04Q, 25V 47UF M 3A
C676	24669479	ELECTROLYTIC, 50V 4.7UF M 3A
C677	24503042	PLASTIC FILM, 63V 0.12UF J
C678	24503041	PLASTIC FILM , 63V 0.1UF J
C679	24503041	PLASTIC FILM , 63V 0.1UF J
C680	24669222	ELECTROLYTIC, 50V 2200UF M 3A
C681	24668102	ELECTROLYTIC, 35V 1000UF M 3A
C682	24668102	ELECTROLYTIC, 35V 1000UF M 3A
C683	24668102	ELECTROLYTIC, 35V 1000UF M 3A
C684	24109103	CERAMIC CHIP, 50V B 0.01UF K
C691	24797479	ELECTROLYTIC, 50V 4.7UF M
C693	24590562	PLASTIC FILM, 50V 5600PF J
C694	24590562	PLASTIC FILM, 50V 5600PF J
C704	24591822	PLASTIC FILM, 50V 8200PF J
C705	24232103	CERAMIC DISC, 50V F 0.01UF Z
C707	24794470	ELECTROLYTIC, 16V 47UF M
C712	24666470	ELECTORLYTIC, 16V 47UF M 3A
C713	24709100	ELECTROLYTIC, 200V 10UF M
C714	24436101	CERAMIC DISC, 50V SL 100PF J
C715	24214472	CERAMIC DISC, 500V B 4700PF K
C716	24436101	CERAMIC DISC, 50V SL 100PF J
C717	24214472	CERAMIC DISC, 500V B 4700PF K
C718	24766470	ELECTROLYTIC, 50V 47UF M
C719	24435560	CERAMIC DISC, 500V SL 56PF J
C720	24709100	ELECTROLYTIC, 200V 10UF M
C721	24797470	ELECTROLYTIC 04G, 50V 47UF M
C726	24212102	CERAMIC DISC, 50V B 1000PF K
⚠ C801	24503512	MT PLA PHE840MX6220MB06MR
⚠ C802	24503511	MT PLA PHE840MB6100MB05
C805	24092623	CERAMIC DISC, 250V F 0.01UF Z
C806	24092623	CERAMIC DISC, 250V F 0.01UF Z
C808	24667101	ELECTROLYTIC CE04Q, 25V 100UF M 3A
C810	24086062	ELECTROLYTIC, 200V 1000UF M 3F
C813	24092593	CERAMIC DISC, AC250V E 1000PF M
C814	24092593	CERAMIC DISC, AC250V E 1000PF M
⚠ C815	24092583	CERAMIC DISC, AC250V E 2200PF M
⚠ C816	24092591	CERAMIC DISC, AC250V B 470PF K
C817	24092339	CERAMIC DISC, 2KV 330PF K
C818	24503237	PLASTIC FILM CF92 T 1250VH 2200PF H
C821	24214471	CERAMIC DISC, 500V B 470PF K
C823	24212471	CERAMIC DISC, 50V B 470PF K
C829	24591222	PLASTIC FILM, 50V 2200PF J
C830	24591103	PLASTIC FILM, 50V 0.01UF J
C834	24539334	PLASTIC FILM, 50V 0.33UF J
C835	24666470	ELECTORLYTIC, 16V 47UF M 3A
C836	24762222	ELECTROLYTIC, 10V 2200UF M 3D
C840	24679220	ELECTROLYTIC, 250V 22UF M 3A
C841	24073043	ELECTROLYTIC, 16V 2200UF M 3A
C842	24503041	PLASTIC FILM , 63V 0.1UF J
C843	24092469	CERAMIC DISC, 2KV B 100PF K
C844	24793221	ELECTROLYTIC, 10V 220UF M
C845	24073082	ELECTROLYTIC, 50V 2.2UF M 3A
C884	24073215	ELECTROLYTEC CE04Q 160V 220UF M
C886	24214471	CERAMIC DISC, 500V B 470PF K
C889	24797222	ELECTROLYTIC, 50V 2200UF M
C890	24503041	PLASTIC FILM , 63V 0.1UF J

Location No.	Parts No.	Description
C891	24073161	ELECTROLYTIC CE04P 16V 3900UF M 3A
C892	24073172	ELECTROLYTIC CE04P 25V 1000UF M 3A
C893	24092339	CERAMIC DISC, 2KV 330PF K
C896	24214471	CERAMIC DISC, 500V B 470PF K
C898	24434100	CERAMIC DISC, 500V SL 10PF D
C899	24214471	CERAMIC DISC, 500V B 470PF K
C901	24503507	PLASTIC FILM, AC275V 0.22UF K
C902	24092353	CERAMIC DISC, 2KV 4700PF K
C903	24436221	CERAMIC DISC, 50V SL 220PF J
C905	24436221	CERAMIC DISC, 50V SL 220PF J
C907	24436221	CERAMIC DISC, 50V SL 220PF J
C909	24679220	ELECTROLYTIC, 250V 22UF M 3A
C910	24669478	ELECTROLYTIC, 50V 0.47UF M 3A
C911	24203100	ELECTORLYTIC, 16V 10UF M 7L 3A
C912	24073041	ELECTROLYTIC, 16V 470UF M 3A
C913	24763102	ELECTROLYTIC, 16V 1000UF M
C914	24092398	CERAMIC DISC, 25V 0.1UF Z
C918	24092398	CERAMIC DISC, 25V 0.1UF Z
C919	24092398	CERAMIC DISC, 25V 0.1UF Z
C920	24436221	CERAMIC DISC, 50V SL 220PF J
C921	24436221	CERAMIC DISC, 50V SL 220PF J
C922	24436221	CERAMIC DISC, 50V SL 220PF J
C930	24214102	CERAMIC DISC, 500V B 1000PF K
C931	24214101	CERAMIC DISC, 500V B 100PF K
C963	24436331	CERAMIC DISC, 50V SL 330PF J
C964	24436331	CERAMIC DISC, 50V SL 330PF J
C965	24436331	CERAMIC DISC, 50V SL 330PF J
C970	24214102	CERAMIC DISC, 500V B 1000PF K
C999	24073039	ELECTROLYTIC, 16V 220UF M 3A
CB01	24794470	ELECTROLYTIC, 16V 47UF M
CC07	24109102	CERAMIC CHIP, 50V B 1000PF K
CC08	24109102	CERAMIC CHIP, 50V B 1000PF K
CC09	24109102	CERAMIC CHIP, 50V B 1000PF K
CC10	24109102	CERAMIC CHIP, 50V B 1000PF K
CJ01	24567104	PLASTIC FILM, 50V 0.1UF J
CJ02	24666470	ELECTORLYTIC, 16V 47UF M 3A
CJ03	24567104	PLASTIC FILM, 50V 0.1UF J
CJ04	24666470	ELECTORLYTIC, 16V 47UF M 3A
CJ05	24794101	ELECTROLYTIC, 16V 100UF M
CJ06	24232103	CERAMIC DISC, 50V F 0.01UF Z
CS01	24797100	ELECTROLYTIC, 50V 10UF M
CS02	24797100	ELECTROLYTIC, 50V 10UF M
CS05	24109103	CERAMIC CHIP, 50V B 0.01UF K
CS07	24206479	ELECTROLYTIC, 50V 4.7UF M 7L 3A
CS08	24206479	ELECTROLYTIC, 50V 4.7UF M 7L 3A
CS20	24797479	ELECTROLYTIC, 50V 4.7UF M
CS25	24797479	ELECTROLYTIC, 50V 4.7UF M
CS40	24092538	CERAMIC CHIP, 10V F 1UF Z
CS41	24092538	CERAMIC CHIP, 10V F 1UF Z
CS42	24092538	CERAMIC CHIP, 10V F 1UF Z
CS43	24092538	CERAMIC CHIP, 10V F 1UF Z
CS44	24092538	CERAMIC CHIP, 10V F 1UF Z
CS45	24092538	CERAMIC CHIP, 10V F 1UF Z
CS46	24092538	CERAMIC CHIP, 10V F 1UF Z
CS47	24092538	CERAMIC CHIP, 10V F 1UF Z
CS48	24092538	CERAMIC CHIP, 10V F 1UF Z
CS49	24092538	CERAMIC CHIP, 10V F 1UF Z
CS50	24092538	CERAMIC CHIP, 10V F 1UF Z
CS51	24092538	CERAMIC CHIP, 10V F 1UF Z
CS52	24092538	CERAMIC CHIP, 10V F 1UF Z
CS53	24092538	CERAMIC CHIP, 10V F 1UF Z
CS54	24092538	CERAMIC CHIP, 10V F 1UF Z
CS55	24092538	CERAMIC CHIP, 10V F 1UF Z
CS56	24092538	CERAMIC CHIP, 10V F 1UF Z
CS57	24794470	ELECTROLYTIC, 16V 47UF M
CS64	24794220	ELECTROLYTIC, 16V 22UF M

Location No.	Parts No.	Description
CV01	24100104	CERAMIC CHIP, 25V F 0.1UF Z
CV15	24092538	CERAMIC CHIP, 10V F 1UF Z
CV16	24794220	ELECTROLYTIC, 16V 22UF M
CV17	24092538	CERAMIC CHIP, 10V F 1UF Z
CV21	24092538	CERAMIC CHIP, 10V F 1UF Z
CV23	24092538	CERAMIC CHIP, 10V F 1UF Z
CV25	24092538	CERAMIC CHIP, 10V F 1UF Z
CV27	24092538	CERAMIC CHIP, 10V F 1UF Z
CV29	24092538	CERAMIC CHIP, 10V F 1UF Z
CV31	24092538	CERAMIC CHIP, 10V F 1UF Z
CV33	24092538	CERAMIC CHIP, 10V F 1UF Z
CV35	24092538	CERAMIC CHIP, 10V F 1UF Z
CV37	24092538	CERAMIC CHIP, 10V F 1UF Z
CV53	24092621	CERAMIC CHIP, 10V B 1UF K
CV57	24794101	ELECTROLYTIC, 16V 100UF M
CV65	24092538	CERAMIC CHIP, 10V F 1UF Z
CV67	24092538	CERAMIC CHIP, 10V F 1UF Z
CV69	24100104	CERAMIC CHIP, 25V F 0.1UF Z
CV70	24794101	ELECTROLYTIC, 16V 100UF M
CV71	24092538	CERAMIC CHIP, 10V F 1UF Z
CV73	24092538	CERAMIC CHIP, 10V F 1UF Z
CV75	24100104	CERAMIC CHIP, 25V F 0.1UF Z
CV76	24092538	CERAMIC CHIP, 10V F 1UF Z
CV79	24092538	CERAMIC CHIP, 10V F 1UF Z
CV81	24109102	CERAMIC CHIP, 50V B 1000PF K
CV82	24109102	CERAMIC CHIP, 50V B 1000PF K
C3100	24667102	ELECTROLYTIC, 25V 1000UF M 3A
C4211	24539104	PLASTIC FILM, 50V 0.1UF J
C4690	24109103	CERAMIC CHIP, 50V B 0.01UF K
C4691	24109822	CERAMIC CHIP, 50V B 8200PF K
C4693	24591473	PLASTIC FILM, 50V 0.047UF J
C4710	24092538	CERAMIC CHIP, 10V F 1UF Z
C4711	24092743	CERAMIC CHIP, 10V F 0.47UF Z
C8341	24667100	ELECTROLYTIC, 16V 10UF M 3A
C8342	24539334	PLASTIC FILM, 50V 0.33UF J
C8344	24539334	PLASTIC FILM, 50V 0.33UF J
C8345	24539334	PLASTIC FILM, 50V 0.33UF J
C8347	24665220	ELECTROLYTIC, 10V 22UF M 3A
C8348	24665220	ELECTROLYTIC, 10V 22UF M 3A
C8349	24666100	ELECTROLYTIC, 10V 10UF M 3A
C8350	24666100	ELECTROLYTIC, 10V 10UF M 3A
C8351	24073150	ELECTROLYTIC CE04P 16V 56UF M 3A
C8352	24666100	ELECTROLYTIC, 10V 10UF M 3A
C8353	24092795	CERAMIC CHIP CK73B 6.3V 2.2UP K
C8355	24092730	CERAMIC CHIP, 16V B 0.1UF K
CV100	24794100	ELECTROLYTIC, 16V 10UF M
CV101	24232103	CERAMIC DISC, 50V F 0.01UF Z
CV481	24100104	CERAMIC CHIP, 25V F 0.1UF Z
CV482	24794101	ELECTROLYTIC, 16V 100UF M
CV483	24794471	ELECTROLYTIC, 16V 470UF M
CV701	24100104	CERAMIC CHIP, 25V F 0.1UF Z
CY102	24665221	ELECTROLYTIC CE04Q, 10V 220UF M 3A
CY105	24100102	CERAMIC CHIP, 50V F 1000PF Z
CY160	24815393	CERAMIC CHIP, 50V B 39000PF K
RESISTORS		
R101	24553223	OXIDE METAL FILM, 1W 22K OHM J
R150	24011332	CHIP, METAL FILM, 1/20W 3.3K OHM J
R151	24011562	CHIP, METAL FILM, 1/20W 5.6K OHM J
R152	24011103	CHIP, METAL FILM, 1/20W 10K OHM J
R173	24011103	CHIP, METAL FILM, 1/20W 10K OHM J
R174	24011273	CHIP, 1/20W 27K OHM J
R201	24011750	CHIP, METAL FILM, 1/20W 75 OHM J
R202	24011750	CHIP, METAL FILM, 1/20W 75 OHM J
R203	24011750	CHIP, METAL FILM, 1/20W 75 OHM J
R204	24011750	CHIP, METAL FILM, 1/20W 75 OHM J

Location No.	Parts No.	Description
R205	24011750	CHIP, METAL FILM, 1/20W 75 OHM J
R206	24011750	CHIP, METAL FILM, 1/20W 75 OHM J
R217	24366103	CARBON FILM, 1/6W 10K OHM J
R218	24366333	CARBON FILM, 1/6W 33K OHM J
R219	24366563	CARBON FILM, 1/6W 56K OHM J
R227	24366273	CARBON FILM, 1/6W 27K OHM J
R228	24366562	CARBON FILM, 1/6W 5.6K OHM J
R303	24552151	OXIDE METAL FILM, 1/2W 150 OHM J
R305	24322109	OXIDE METAL FILM, 1W 1 OHM J
R315	24011274	CHIP, 1/20W 270K OHM J
R316	24011823	CHIP, METAL FILM, 1/20W 82K OHM J
R318	24011101	CHIP, METAL FILM, 1/20W 100 OHM J
R319	24011101	CHIP, METAL FILM, 1/20W 100 OHM J
R320	24011101	CHIP, METAL FILM, 1/20W 100 OHM J
R321	24011224	CHIP, METAL FILM, 1/20W 220K OHM J
R322	24011274	CHIP, 1/20W 270K OHM J
R324	24011394	CHIP, 1/20W 390K OHM J
⚠ R327	24338159	OXIDE METAL FILM, 1W 1.5 OHM J
⚠ R328	24338159	OXIDE METAL FILM, 1W 1.5 OHM J
R329	24011103	CHIP, METAL FILM, 1/20W 10K OHM J
R330	24011104	CHIP, METAL FILM, 1/20W 100K OHM J
R331	24872823	CHIP, 1/16W 82K OHM J
R332	24011103	CHIP, METAL FILM, 1/20W 10K OHM J
R333	24011101	CHIP, METAL FILM, 1/20W 100 OHM J
R334	24998132	CHIP, 1/16W 1.3K OHM
R335	24011331	CHIP, METAL FILM, 1/20W 330 OHM J
R336	24383151	OXIDE METAL FILM, 2W 150 OHM J
R337	24011223	CHIP, METAL FILM, 1/20W 22K OHM J
R339	24366163	CARBON FILM, 1/6W 16K OHM J
R340	24553820	OXIDE METAL FILM, 1W 82 OHM J
R341	24998152	CHIP, METAL FILM, 1/16W 1.5K OHM
R342	24998153	CHIP, 1/16W 15K OHM
R346	24011103	CHIP, METAL FILM, 1/20W 10K OHM J
R348	24998682	CHIP, 1/16W 6.8K OHM D
R349	24011472	CHIP, METAL FILM, 1/20W 4.7K OHM J
R365	24552122	OXIDE METAL FILM, 1/2W 1.2K OHM J
R366	24011911	CHIP, METAL FILM, 1/20W 910 OHM J
R367	24011682	CHIP, METAL FILM, 1/20W 6.8K OHM J
R368	24003898	METAL FILM, 1/4W 3.3K OHM J
R370	24872103	CHIP, 1/16W 10K OHM J
R371	24011103	CHIP, METAL FILM, 1/20W 10K OHM J
R372	24011103	CHIP, METAL FILM, 1/20W 10K OHM J
R373	24011102	CHIP, METAL FILM, 1/20W 1K OHM J
R374	24011102	CHIP, METAL FILM, 1/20W 1K OHM J
R376	24011471	CHIP, METAL FILM, 1/20W 470 OHM J
R377	24366220	CARBON FILM, 1/6W 22 OHM J
R405	24553682	OXIDE METAL FILM, 1W 6.8K OHM J
R411	24366101	CARBON FILM, 1/6W 100 OHM J
R412	24323228	OXIDE METAL FILM, 2W 0.22 OHM J
R415	24383271	OXIDE METAL FILM, 2W 270 OHM J
R421	24531220	FUSIBLE, 1/2W 22 OHM J
R426	24366222	CARBON FILM, 1/6W 2.2K OHM J
R429	24553100	OXIDE METAL FILM, 1W 10 OHM J
R431	24531220	FUSIBLE, 1/2W 22 OHM J
R435	24367184	CARBON FILM, 1/6W 180K OHM G
R441	24383181	OXIDE METAL FILM, 2W 180 OHM J
R460	24366103	CARBON FILM, 1/6W 10K OHM J
R461	24366102	CARBON FILM, 1/6W 1K OHM J
R462	24366562	CARBON FILM, 1/6W 5.6K OHM J
R463	24366473	CARBON FILM, 1/6W 47K OHM J
R464	24366101	CARBON FILM, 1/6W 100 OHM J
⚠ R465	24011391	CHIP, 1/20W 390 OHM J
R466	24383220	OXIDE METAL FILM, 2W 22 OHM J
R467	24383220	OXIDE METAL FILM, 2W 22 OHM J
R464	24366101	CARBON FILM, 1/6W 100 OHM J
R465	24011391	CHIP, 1/20W 390 OHM J

Location No.	Parts No.	Description
R466	24383220	OXIDE METAL FILM, 2W 22 OHM J
R467	24383220	OXIDE METAL FILM, 2W 22 OHM J
⚠ R470	24339518	OXIDE METAL FILM, 2W 0.51 OHM J
R471	24381271	OXIDE METAL FILM, 1/2W 270 OHM J
R472	24381270	OXIDE METAL FILM, 1/2W 27 OHM J
R473	24000247	METAL FILM, 1/4W 39K OHM F
R474	24872472	CHIP, 1/16W 4.7K OHM J
R475	24872912	CHIP, 1/16W 9.1K OHM J
R476	24000221	METAL FILM, 1/4W 20K OHM F
R477	24011102	CHIP, METAL FILM, 1/20W 1K OHM J
⚠ R478	24338109	OXIDE METAL FILM, 1W 1 OHM J
R479	24381131	OXIDE METAL FILM, 1/2W 130 OHM J
R481	24011103	CHIP, METAL FILM, 1/20W 10K OHM J
R482	24011182	CHIP, METAL FILM, 1/20W 1.8K OHM J
R489	24011563	CHIP, METAL FILM, 1/20W 56K OHM J
R494	24367224	CARBON FILM, 1/6W 220K OHM G
R601	24011333	CHIP, METAL FILM, 1/20W 33K OHM J
R602	24011472	CHIP, METAL FILM, 1/20W 4.7K OHM J
R603	24011333	CHIP, METAL FILM, 1/20W 33K OHM J
R604	24000445	CHIP JUMPER, 1608TYPE
R605	24011103	CHIP, METAL FILM, 1/20W 10K OHM J
R606	24011103	CHIP, METAL FILM, 1/20W 10K OHM J
R607	24366561	CARBON FILM, 1/6W 560 OHM J
R609	24000445	CHIP JUMPER, 1608TYPE
R612	24011103	CHIP, METAL FILM, 1/20W 10K OHM J
R613	24011224	CHIP, METAL FILM, 1/20W 220K OHM J
R614	24011222	CHIP, METAL FILM, 1/20W 2.2K OHM J
R615	24011472	CHIP, METAL FILM, 1/20W 4.7K OHM J
R616	24011472	CHIP, METAL FILM, 1/20W 4.7K OHM J
R650	24011822	CHIP, METAL FILM, 1/20W 8.2K OHM J
R651	24011102	CHIP, METAL FILM, 1/20W 1K OHM J
R653	24011102	CHIP, METAL FILM, 1/20W 1K OHM J
R661	24011682	CHIP, METAL FILM, 1/20W 6.8K OHM J
R662	24011682	CHIP, METAL FILM, 1/20W 6.8K OHM J
R663	24011152	CHIP, METAL FILM, 1/20W 1.5K OHM J
R664	24011152	CHIP, METAL FILM, 1/20W 1.5K OHM J
R665	24011222	CHIP, METAL FILM, 1/20W 2.2K OHM J
R666	24011222	CHIP, METAL FILM, 1/20W 2.2K OHM J
R667	24011123	CHIP, METAL FILM, 1/20W 12K OHM J
R671	24366229	CARBON FILM, 1/6W 2.2 OHM J
R672	24366229	CARBON FILM, 1/6W 2.2 OHM J
R679	24366229	CARBON FILM, 1/6W 2.2 OHM J
R680	24011104	CHIP, METAL FILM, 1/20W 100K OHM J
R681	24011104	CHIP, METAL FILM, 1/20W 100K OHM J
R682	24011221	CHIP, METAL FILM, 1/20W 220 OHM J
R683	24011221	CHIP, METAL FILM, 1/20W 220 OHM J
R684	24011103	CHIP, METAL FILM, 1/20W 10K OHM J
R685	24011473	CHIP, METAL FILM, 1/20W 47K OHM J
R686	24011473	CHIP, METAL FILM, 1/20W 47K OHM J
R687	24011113	CHIP, METAL FILM, 1/20W 11K OHM J
R688	24000445	CHIP JUMPER, 1608TYPE
R693	24011222	CHIP, METAL FILM, 1/20W 2.2K OHM J
R694	24011222	CHIP, METAL FILM, 1/20W 2.2K OHM J
R697	24011102	CHIP, METAL FILM, 1/20W 1K OHM J
R702	24552221	OXIDE METAL FILM, 1/2W 220 OHM J
R709	24366563	CARBON FILM, 1/6W 56K OHM J
R713	24366393	CARBON FILM, 1/6W 39K OHM J
R715	24366273	CARBON FILM, 1/6W 27K OHM J
R716	24366273	CARBON FILM, 1/6W 27K OHM J
R717	24366333	CARBON FILM, 1/6W 33K OHM J
R718	24366222	CARBON FILM, 1/6W 2.2K OHM J
R719	24366101	CARBON FILM, 1/6W 100 OHM J
R720	24366102	CARBON FILM, 1/6W 1K OHM J
R721	24366101	CARBON FILM, 1/6W 100 OHM J
R722	24552471	OXIDE METAL FILM, 1/2W 470 OHM J
R723	24366101	CARBON FILM, 1/6W 100 OHM J

Location No.	Parts No.	Description
R724	24366151	CARBON FILM, 1/6W 150 OHM J
R725	24366182	CARBON FILM, 1/6W 1.8K OHM J
R730	24552100	OXIDE METAL FILM, 1/2W 10 OHM J
R731	24552331	OXIDE METAL FILM, 1/2W 330 OHM J
R732	24366330	CARBON FILM, 1/6W 33 OHM J
R733	24366683	CARBON FILM, 1/6W 68K OHM J
R734	24366330	CARBON FILM, 1/6W 33 OHM J
R735	24366683	CARBON FILM, 1/6W 68K OHM J
R736	24553470	OXIDE METAL FILM, 1W 47 OHM J
R737	24366681	CARBON FILM, 1/6W 680 OHM J
R738	24366102	CARBON FILM, 1/6W 1K OHM J
R739	24366681	CARBON FILM, 1/6W 680 OHM J
R740	24553470	OXIDE METAL FILM, 1W 47 OHM J
R741	24322229	OXIDE METAL FILM, 1W 2.2 OHM J
R742	24322229	OXIDE METAL FILM, 1W 2.2 OHM J
R743	24554181	OXIDE METAL FILM, 2W 180 OHM J
R744	24366122	CARBON FILM, 1/6W 1.2K OHM J
R745	24366122	CARBON FILM, 1/6W 1.2K OHM J
⚠ R808	24019493	THERMISTOR, PTC, AC140V 1.5 OHM M
⚠ R810	24045007	CEMENT 20W 1.2 J
R814	24366102	CARBON FILM, 1/6W 1K OHM J
R818	24007723	CEMENT 15W 27 J
R820	24004942	METAL FILM, 1W 0.1 OHM J
R821	24381330	OXIDE FILM 1/2W 33 J
R823	24366102	CARBON FILM, 1/6W 1K OHM J
R829	24004942	METAL FILM, 1W 0.1 OHM J
R832	24339568	OXIDE METAL FILM, 2W 0.56 OHM J
R834	24011222	CHIP, METAL FILM, 1/20W 2.2K OHM J
R835	24552471	OXIDE METAL FILM, 1/2W 470 OHM J
R840	24552562	OXIDE METAL FILM, 1/2W 5.6K OHM J
R841	24366102	CARBON FILM, 1/6W 1K OHM J
R842	24376563	CARB0N FILM, 1/2W 56K OHM J
R843	24011473	CHIP, METAL FILM, 1/20W 47K OHM J
R844	24366103	CARBON FILM, 1/6W 10K OHM J
R845	24376563	CARB0N FILM, 1/2W 56K OHM J
R861	24553153	OXIDE METAL FILM, 1W 15K OHM J
R883	24011331	CHIP, METAL FILM, 1/20W 330 OHM J
R884	24011471	CHIP, METAL FILM, 1/20W 470 OHM J
R885	24011222	CHIP, METAL FILM, 1/20W 2.2K OHM J
R886	24011331	CHIP, METAL FILM, 1/20W 330 OHM J
⚠ R899	24004717	METAL GLAZE, 1/2W 3.9M OHM J
R901	24552101	OXIDE METAL FILM, 1/2W 100 OHM J
R902	24552101	OXIDE METAL FILM, 1/2W 100 OHM J
R903	24552101	OXIDE METAL FILM, 1/2W 100 OHM J
R904	24366472	CARBON FILM, 1/6W 4.7K OHM J
R905	24366150	CARBON FILM, 1/6W 15 OHM J
R907	24366560	CARBON FILM, 1/6W 56 OHM J
R913	24366560	CARBON FILM, 1/6W 56 OHM J
R914	24366101	CARBON FILM, 1/6W 100 OHM J
R915	24366150	CARBON FILM, 1/6W 15 OHM J
R916	24366330	CARBON FILM, 1/6W 33 OHM J
R917	24366271	CARBON FILM, 1/6W 270 OHM J
R918	24366330	CARBON FILM, 1/6W 33 OHM J
R920	24000910	FUSIBLE, 1W 3.3 OHM J
R921	24366101	CARBON FILM, 1/6W 100 OHM J
R922	24366150	CARBON FILM, 1/6W 15 OHM J
R924	24366330	CARBON FILM, 1/6W 33 OHM J
R925	24366271	CARBON FILM, 1/6W 270 OHM J
R928	24366101	CARBON FILM, 1/6W 100 OHM J
R929	24366150	CARBON FILM, 1/6W 15 OHM J
R930	24366330	CARBON FILM, 1/6W 33 OHM J
R932	24366332	CARBON FILM, 1/6W 3.3K OHM J
R933	24545150	FUSIBLE, 1/4W 15 OHM J
R934	24366471	CARBON FILM, 1/6W 470 OHM J
R935	24366122	CARBON FILM, 1/6W 1.2K OHM J
R937	24366271	CARBON FILM, 1/6W 270 OHM J

Location No.	Parts No.	Description
R940	24366560	CARBON FILM, 1/6W 56 OHM J
R942	24366222	CARBON FILM, 1/6W 2.2K OHM J
R943	24366222	CARBON FILM, 1/6W 2.2K OHM J
R944	24366222	CARBON FILM, 1/6W 2.2K OHM J
R945	24366330	CARBON FILM, 1/6W 33 OHM J
R946	24366330	CARBON FILM, 1/6W 33 OHM J
R952	24366222	CARBON FILM, 1/6W 2.2K OHM J
R953	24366222	CARBON FILM, 1/6W 2.2K OHM J
R954	24366222	CARBON FILM, 1/6W 2.2K OHM J
R958	24366101	CARBON FILM, 1/6W 100 OHM J
R961	24568472	CERAMIC COVERED, 7W 4.7K OHM J
R962	24568472	CERAMIC COVERED, 7W 4.7K OHM J
R964	24568472	CERAMIC COVERED, 7W 4.7K OHM J
R965	24568472	CERAMIC COVERED, 7W 4.7K OHM J
R966	24366331	CARBON FILM, 1/6W 330 OHM J
R977	24366681	CARBON FILM, 1/6W 680 OHM J
R978	24568472	CERAMIC COVERED, 7W 4.7K OHM J
R979	24568472	CERAMIC COVERED, 7W 4.7K OHM J
R980	24552101	OXIDE METAL FILM, 1/2W 100 OHM J
R981	24552101	OXIDE METAL FILM, 1/2W 100 OHM J
R982	24552101	OXIDE METAL FILM, 1/2W 100 OHM J
R992	24366150	CARBON FILM, 1/6W 15 OHM J
R3330	24011222	CHIP, METAL FILM, 1/20W 2.2K OHM J
R3340	24011222	CHIP, METAL FILM, 1/20W 2.2K OHM J
R3901	24011102	CHIP, METAL FILM, 1/20W 1K OHM J
R3902	24011133	CHIP, METAL FILM, 1/20W 13K OHM J
R3903	24011682	CHIP, METAL FILM, 1/20W 6.8K OHM J
R3904	24011102	CHIP, METAL FILM, 1/20W 1K OHM J
R4111	24019259	FUSIBLE, 1/4W 27 OHM G
R4310	24011183	CHIP, METAL FILM, 1/20W 18K OHM J
R4461	24011102	CHIP, METAL FILM, 1/20W 1K OHM J
R4500	24321229	OXIDE METAL FILM, 1/2W 2.2 OHM J
R4501	24553470	OXIDE METAL FILM, 1W 47 OHM J
R4504	24553470	OXIDE METAL FILM, 1W 47 OHM J
R4560	24011102	CHIP, METAL FILM, 1/20W 1K OHM J
R4562	24011103	CHIP, METAL FILM, 1/20W 10K OHM J
R4563	24011752	CHIP, METAL FILM, 1/20W 7.5K OHM J
R4564	24011183	CHIP, METAL FILM, 1/20W 18K OHM J
R4620	24998333	CHIP, 1/16W 33K OHM
R4630	24011183	CHIP, METAL FILM, 1/20W 18K OHM J
⚠ R4670	24998472	CHIP, 1/16W 4.7K OHM
R4690	24872103	CHIP, 1/16W 10K OHM J
R4691	24872242	CHIP, 1/16W 2.4K OHM J
R4692	24872471	CHIP, 1/16W 470 OHM J
R4693	24552331	OXIDE METAL FILM, 1/2W 330 OHM J
R4700	24011274	CHIP, 1/20W 270K OHM J
R4701	24011474	CHIP, METAL FILM, 1/20W 470K OHM J
R4702	24011271	CHIP, 1/20W 270 OHM J
R4703	24011473	CHIP, METAL FILM, 1/20W 47K OHM J
R4710	24011102	CHIP, METAL FILM, 1/20W 1K OHM J
R4711	24011471	CHIP, METAL FILM, 1/20W 470 OHM J
R4712	24011471	CHIP, METAL FILM, 1/20W 470 OHM J
R4713	24011102	CHIP, METAL FILM, 1/20W 1K OHM J
R4714	24011471	CHIP, METAL FILM, 1/20W 470 OHM J
R4715	24011471	CHIP, METAL FILM, 1/20W 470 OHM J
R4717	24011102	CHIP, METAL FILM, 1/20W 1K OHM J
R4718	24011101	CHIP, METAL FILM, 1/20W 100 OHM J
R4799	24872103	CHIP, 1/16W 10K OHM J
R9180	24366470	CARBON FILM, 1/6W 47 OHM J
R9240	24366470	CARBON FILM, 1/6W 47 OHM J
R9300	24366470	CARBON FILM, 1/6W 47 OHM J
RA71	24366273	CARBON FILM, 1/6W 27K OHM J
RA72	24366153	CARBON FILM, 1/6W 15K OHM J
RA73	24366822	CARBON FILM, 1/6W 8.2K OHM J
RA76	24366822	CARBON FILM, 1/6W 8.2K OHM J
RA77	24366153	CARBON FILM, 1/6W 15K OHM J

Location No.	Parts No.	Description
RB11	24366271	CARBON FILM, 1/6W 270 OHM J
RB12	24366103	CARBON FILM, 1/6W 10K OHM J
RB13	24366470	CARBON FILM, 1/6W 47 OHM J
RB20	24011103	CHIP, METAL FILM, 1/20W 10K OHM J
RB21	24366104	CARBON FILM, 1/6W 100K OHM J
RB31	24011103	CHIP, METAL FILM, 1/20W 10K OHM J
RC01	24000445	CHIP JUMPER, 1608TYPE
RC02	24000445	CHIP JUMPER, 1608TYPE
RC03	24000445	CHIP JUMPER, 1608TYPE
RC04	24000445	CHIP JUMPER, 1608TYPE
RC05	24000445	CHIP JUMPER, 1608TYPE
RC06	24000445	CHIP JUMPER, 1608TYPE
RC07	24011102	CHIP, METAL FILM, 1/20W 1K OHM J
RC08	24011102	CHIP, METAL FILM, 1/20W 1K OHM J
RC09	24011102	CHIP, METAL FILM, 1/20W 1K OHM J
RC10	24011102	CHIP, METAL FILM, 1/20W 1K OHM J
RC11	24000445	CHIP JUMPER, 1608TYPE
RC12	24000445	CHIP JUMPER, 1608TYPE
RJ01	24000633	METAL FILM, 1/4W 10K OHM F
RJ02	24000356	METAL FILM, 1/4W 820 OHM F
RJ03	24366512	CARBON FILM, 1/6W 5.1K OHM J
RJ05	24310159	OXIDE METAL FILM, 1/2W 1.5 OHM J
RJ06	24382471	OXIDE METAL FILM, 1W 470 OHM J
RJ07	24310109	OXIDE METAL FILM, 1/2W 1 OHM J
RJ08	24366102	CARBON FILM, 1/6W 1K OHM J
RJ09	24366102	CARBON FILM, 1/6W 1K OHM J
RJ10	24366102	CARBON FILM, 1/6W 1K OHM J
RS01	24011333	CHIP, METAL FILM, 1/20W 33K OHM J
RS02	24011333	CHIP, METAL FILM, 1/20W 33K OHM J
RS03	24011101	CHIP, METAL FILM, 1/20W 100 OHM J
RS04	24011101	CHIP, METAL FILM, 1/20W 100 OHM J
RS05	24011822	CHIP, METAL FILM, 1/20W 8.2K OHM J
RS06	24011822	CHIP, METAL FILM, 1/20W 8.2K OHM J
RS07	24011333	CHIP, METAL FILM, 1/20W 33K OHM J
RS08	24011333	CHIP, METAL FILM, 1/20W 33K OHM J
RS13	24011102	CHIP, METAL FILM, 1/20W 1K OHM J
RS14	24011102	CHIP, METAL FILM, 1/20W 1K OHM J
RS21	24011103	CHIP, METAL FILM, 1/20W 10K OHM J
RS25	24011104	CHIP, METAL FILM, 1/20W 100K OHM J
RS26	24011104	CHIP, METAL FILM, 1/20W 100K OHM J
RS31	24011104	CHIP, METAL FILM, 1/20W 100K OHM J
RS32	24011104	CHIP, METAL FILM, 1/20W 100K OHM J
RS33	24011103	CHIP, METAL FILM, 1/20W 10K OHM J
RS34	24011103	CHIP, METAL FILM, 1/20W 10K OHM J
RS40	24011562	CHIP, METAL FILM, 1/20W 5.6K OHM J
RS41	24011562	CHIP, METAL FILM, 1/20W 5.6K OHM J
RS42	24011562	CHIP, METAL FILM, 1/20W 5.6K OHM J
RS43	24011562	CHIP, METAL FILM, 1/20W 5.6K OHM J
RS44	24011562	CHIP, METAL FILM, 1/20W 5.6K OHM J
RS45	24011562	CHIP, METAL FILM, 1/20W 5.6K OHM J
RS46	24011562	CHIP, METAL FILM, 1/20W 5.6K OHM J
RS47	24011562	CHIP, METAL FILM, 1/20W 5.6K OHM J
RS48	24011562	CHIP, METAL FILM, 1/20W 5.6K OHM J
RS49	24011562	CHIP, METAL FILM, 1/20W 5.6K OHM J
RS50	24011562	CHIP, METAL FILM, 1/20W 5.6K OHM J
RS51	24011562	CHIP, METAL FILM, 1/20W 5.6K OHM J
RS52	24011562	CHIP, METAL FILM, 1/20W 5.6K OHM J
RS53	24011562	CHIP, METAL FILM, 1/20W 5.6K OHM J
RS54	24000445	CHIP JUMPER, 1608TYPE
RS55	24011562	CHIP, METAL FILM, 1/20W 5.6K OHM J
RS56	24011562	CHIP, METAL FILM, 1/20W 5.6K OHM J
RS57	24011103	CHIP, METAL FILM, 1/20W 10K OHM J
RS58	24011101	CHIP, METAL FILM, 1/20W 100 OHM J
RS59	24011101	CHIP, METAL FILM, 1/20W 100 OHM J
RS64	24011682	CHIP, METAL FILM, 1/20W 6.8K OHM J
RS65	24011182	CHIP, METAL FILM, 1/20W 1.8K OHM J

Location No.	Parts No.	Description
RS66	24011100	CHIP, METAL FILM, 1/20W 10 OHM J
RS67	24011101	CHIP, METAL FILM, 1/20W 100 OHM J
RS68	24011101	CHIP, METAL FILM, 1/20W 100 OHM J
RS69	24011222	CHIP, METAL FILM, 1/20W 2.2K OHM J
RS70	24011222	CHIP, METAL FILM, 1/20W 2.2K OHM J
RS71	24092795	CERAMIC CHIP CK73B 6.3V 2.2UP K
RS72	24092795	CERAMIC CHIP CK73B 6.3V 2.2UP K
RS73	24011103	CHIP, METAL FILM, 1/20W 10K OHM J
RS74	24011103	CHIP, METAL FILM, 1/20W 10K OHM J
RS76	24011101	CHIP, METAL FILM, 1/20W 100 OHM J
RS77	24011101	CHIP, METAL FILM, 1/20W 100 OHM J
RV01	24011101	CHIP, METAL FILM, 1/20W 100 OHM J
RV02	24011103	CHIP, METAL FILM, 1/20W 10K OHM J
RV021	24011104	CHIP, METAL FILM, 1/20W 100K OHM J
RV022	24011104	CHIP, METAL FILM, 1/20W 100K OHM J
RV081	24000445	CHIP JUMPER, 1608TYPE
RV15	24011101	CHIP, METAL FILM, 1/20W 100 OHM J
RV17	24011101	CHIP, METAL FILM, 1/20W 100 OHM J
RV21	24011101	CHIP, METAL FILM, 1/20W 100 OHM J
RV23	24011101	CHIP, METAL FILM, 1/20W 100 OHM J
RV25	24011101	CHIP, METAL FILM, 1/20W 100 OHM J
RV27	24011101	CHIP, METAL FILM, 1/20W 100 OHM J
RV29	24011101	CHIP, METAL FILM, 1/20W 100 OHM J
RV31	24011101	CHIP, METAL FILM, 1/20W 100 OHM J
RV33	24011101	CHIP, METAL FILM, 1/20W 100 OHM J
RV35	24011101	CHIP, METAL FILM, 1/20W 100 OHM J
RV37	24011101	CHIP, METAL FILM, 1/20W 100 OHM J
RV45	24011101	CHIP, METAL FILM, 1/20W 100 OHM J
RV46	24011101	CHIP, METAL FILM, 1/20W 100 OHM J
RV64	24011104	CHIP, METAL FILM, 1/20W 100K OHM J
RV65	24011101	CHIP, METAL FILM, 1/20W 100 OHM J
RV67	24011101	CHIP, METAL FILM, 1/20W 100 OHM J
RV69	24011101	CHIP, METAL FILM, 1/20W 100 OHM J
RV70	24011103	CHIP, METAL FILM, 1/20W 10K OHM J
RV71	24011101	CHIP, METAL FILM, 1/20W 100 OHM J
RV73	24011101	CHIP, METAL FILM, 1/20W 100 OHM J
RV75	24011101	CHIP, METAL FILM, 1/20W 100 OHM J
RV76	24011103	CHIP, METAL FILM, 1/20W 10K OHM J
RV77	24011101	CHIP, METAL FILM, 1/20W 100 OHM J
RV79	24011101	CHIP, METAL FILM, 1/20W 100 OHM J
RV81	24011750	CHIP, METAL FILM, 1/20W 75 OHM J
RV82	24011750	CHIP, METAL FILM, 1/20W 75 OHM J
RV83	24011750	CHIP, METAL FILM, 1/20W 75 OHM J
RV84	24011750	CHIP, METAL FILM, 1/20W 75 OHM J
RV85	24011750	CHIP, METAL FILM, 1/20W 75 OHM J
RV86	24011750	CHIP, METAL FILM, 1/20W 75 OHM J
RV100	24366750	CARBON FILM, 1/6W 75 OHM J
RV101	24366750	CARBON FILM, 1/6W 75 OHM J
RV102	24366750	CARBON FILM, 1/6W 75 OHM J
RV103	24366332	CARBON FILM, 1/6W 3.3K OHM J
RV332	24000445	CHIP JUMPER, 1608TYPE
RV333	24011181	CHIP, METAL FILM, 1/20W 180 OHM J
RV334	24011103	CHIP, METAL FILM, 1/20W 10K OHM J
RV335	24011123	CHIP, METAL FILM, 1/20W 12K OHM J
RV481	24011101	CHIP, METAL FILM, 1/20W 100 OHM J
RV482	24552101	OXIDE METAL FILM, 1/2W 100 OHM J
RV483	24366221	CARBON FILM, 1/6W 220 OHM J
RV484	24011750	CHIP, METAL FILM, 1/20W 75 OHM J
RV501	24011101	CHIP, METAL FILM, 1/20W 100 OHM J
RV503	24011222	CHIP, METAL FILM, 1/20W 2.2K OHM J
RV511	24011101	CHIP, METAL FILM, 1/20W 100 OHM J
RV513	24011222	CHIP, METAL FILM, 1/20W 2.2K OHM J
RV521	24011101	CHIP, METAL FILM, 1/20W 100 OHM J
RV523	24011222	CHIP, METAL FILM, 1/20W 2.2K OHM J
RV541	24011101	CHIP, METAL FILM, 1/20W 100 OHM J
RV543	24011222	CHIP, METAL FILM, 1/20W 2.2K OHM J

Location No.	Parts No.	Description
RV551	24011101	CHIP, METAL FILM, 1/20W 100 OHM J
RV553	24011222	CHIP, METAL FILM, 1/20W 2.2K OHM J
RV561	24011101	CHIP, METAL FILM, 1/20W 100 OHM J
RV563	24011222	CHIP, METAL FILM, 1/20W 2.2K OHM J
RV581	24011101	CHIP, METAL FILM, 1/20W 100 OHM J
RV583	24011471	CHIP, METAL FILM, 1/20W 470 OHM J
RV591	24011101	CHIP, METAL FILM, 1/20W 100 OHM J
RV593	24011471	CHIP, METAL FILM, 1/20W 470 OHM J
RV601	24011101	CHIP, METAL FILM, 1/20W 100 OHM J
RV603	24011471	CHIP, METAL FILM, 1/20W 470 OHM J
RV701	24011104	CHIP, METAL FILM, 1/20W 100K OHM J
RV702	24011104	CHIP, METAL FILM, 1/20W 100K OHM J
RV761	24011104	CHIP, METAL FILM, 1/20W 100K OHM J
RV762	24011104	CHIP, METAL FILM, 1/20W 100K OHM J
RY160	24011471	CHIP, METAL FILM, 1/20W 470 OHM J
COIL & TRANSFORMERS		
L101	23289845	COIL, PEAKING, TRF4680AT
L103	23289844	COIL, PEAKING, TRF4470AT
L105	23103159	FILTER, EMI, TEM2028AA, 7.5X6.4X8 60MMH 0.5A
L301	23248370	COIL, CHOKE EI24 1.0MH TLN3543AH
L302	23289846	COIL, PEAKING, TRF4101AT
⚠ L441	23233110	COIL, LIN 22X40H 7A 12.5MMH TLN2227AH
L442	23248302	COIL, CHOKE, TLN3521GH
L450	23248305	COIL, CHOKE, TLN3346GH
L451	23233119	COIL, WID-H42-0.45-1.4MH TLN2232AH
⚠ L461	23248310	COIL, CHOKE, TLN3500GH
L463	23103145	FERRITE CHOKE, TEM2011AA
L464	23103145	FERRITE CHOKE, TEM2011AA
L491	23248191	COIL, CHOKE, TLN3351AD
L499	23248282	COIL, CHOKE, TLN3458AH
L702	23261974	COIL, FERRITE BEAD, HC5-035
L704	23103859	FILTER, FERRITE CHOKE, TEM2011
L705	23103859	FILTER, FERRITE CHOKE, TEM2011
L706	23237987	COIL, PEAKING, TRF4100AC
L803	23103145	FERRITE CHOKE, TEM2011AA
L805	23248213	COIL, CHOKE, TLN3481AH
L806	23248213	COIL, CHOKE, TLN3481AH
L808	23248213	COIL, CHOKE, TLN3481AH
L815	23103145	FERRITE CHOKE, TEM2011AA
L816	23103145	FERRITE CHOKE, TEM2011AA
L836	23248288	COIL, CHOKE, TLN3299GH
L840	23280019	COIL, PEAKING, TRF4330AZ
L883	23103145	FERRITE CHOKE, TEM2011AA
L884	23248288	COIL, CHOKE, TLN3299GH
L885	23222694	COIL, HORIZ WIDTH, TLN2026
L886	23103145	FERRITE CHOKE, TEM2011AA
L888	23248292	COIL, CHOKE, TLN3499GH
L889	23248292	COIL, CHOKE, TLN3499GH
L891	23103145	FERRITE CHOKE, TEM2011AA
L892	23103145	FERRITE CHOKE, TEM2011AA
L893	23280016	COIL, PEAKING, TRF4100AZ
L894	23248297	COIL, CHOKE, TLN3481GH
L897	23248321	COIL, CHOKE 15X23H 22MMH 4.2A TLN3462AH
⚠ L901	23200498	COIL, DG 0.75CU 50T-2LOOP TSB-2416AH
	23289120	COIL, PEAKING, TRF4120AF @U004
L902	23289689	COIL, PEAKING, TRF46R8AF
L903	23289689	COIL, PEAKING, TRF46R8AF
L904	23289689	COIL, PEAKING, TRF46R8AF
L905	23289835	COIL, PEAKING 1.50MMHK COLTRF41R5AT
L906	23289835	COIL, PEAKING 1.50MMHK COLTRF41R5AT
L907	23289835	COIL, PEAKING 1.50MMHK COLTRF41R5AT
L908	23237987	COIL, PEAKING, TRF4100AC
L910	23103146	EMI FILTER, TEM2030AA
L916	23289120	COIL, PEAKING, TRF4120AF
L924	23289120	COIL, PEAKING, TRF4120AF

Location No.	Parts No.	Description
L8311	23248247	COIL, CHOKE, TLN3499AH
L8312	23248247	COIL, CHOKE, TLN3499AH
⚠LJ901	23200448	COIL, GEOMAGNETIC CORRECTION TSB-2408AG
LV03	23103159	FILTER, EMI, TEM2028AA, 7.5X6.4X8 60MMH 0.5A
LV04	23103159	FILTER, EMI, TEM2028AA, 7.5X6.4X8 60MMH 0.5A
LV05	23103159	FILTER, EMI, TEM2028AA, 7.5X6.4X8 60MMH 0.5A
LV50	23103159	FILTER, EMI, TEM2028AA, 7.5X6.4X8 60MMH 0.5A
LV51	23103159	FILTER, EMI, TEM2028AA, 7.5X6.4X8 60MMH 0.5A
LV52	23103159	FILTER, EMI, TEM2028AA, 7.5X6.4X8 60MMH 0.5A
LV55	23103146	EMI FILTER, TEM2030AA
LV60	23103146	EMI FILTER, TEM2030AA
LV70	23289840	COIL, PEAKING, TRF4100AT
LY101	23248296	COIL, CHOKE
LY102	23238506	COIL, PEAKING, TRF4229AJ
LY103	23238506	COIL, PEAKING, TRF4229AJ
T400	23224390	TRANSFORMER, FOCUS, TLN2226AH
T401	23224381	TRANSFORMER, HORIZ DRIVE, TLN1080GH
⚠T461	23236835	TRANSFORMER, FLY-BACK TFB4215AD
⚠T801	23211729	COIL, LINE FILTER, TRF3232AQ
⚠T802	23211713	COIL, LINE FILTER, TRF3197AQ
⚠T840	23217431	TRANSFORMER, CONVERTER, TPW3425AH
⚠T862	23217665	TRANSFORMER, CONVERTER TPW3548AS
SEMICONDUCTORS		
Q151	23205005	TRANSISTOR, KTA2014Y
Q152	23205006	TRANSISTOR, KTC4075Y
Q172	23205006	TRANSISTOR, KTC4075Y
Q220	23114460	TRANSISTOR, RN1204
Q301	23009931	IC, VERT.OUT CLASS D 2.5A STV9380A
Q302	23009930	IC, E-W CORRECTION IC TA1317AF TA1317AFG(DRY,EL)
Q370	23114497	TRANSISTOR, RN1406
Q371	23314204	TRANSISTOR, 2SC2412K,Q
Q372	23114497	TRANSISTOR, RN1406
Q373	23314204	TRANSISTOR, 2SC2412K,Q
Q374	23314204	TRANSISTOR, 2SC2412K,Q
Q392	23314204	TRANSISTOR, 2SC2412K,Q
Q393	23314204	TRANSISTOR, 2SC2412K,Q
Q394	23314204	TRANSISTOR, 2SC2412K,Q
Q402	23314862	TRANSISTOR, FET, 2SK941
Q404	23205149	TRANSISTOR, 2SC5859(FA)
Q418	23314141	TRANSISTOR, 2SC3852
Q430	23009187	IC, REGULATOR +9V 4% KIA7809API
Q460	23205031	TRANSISTOR, FET, 2SK2920
Q470	23114759	TRANSISTOR, 2SA949-Y
Q484	23205045	TRANSISTOR, 2SA1037AKQ
Q486	23314204	TRANSISTOR, 2SC2412K,Q
Q601	23906597	IC, BA4558F
Q612	23314994	TRANSISTOR, 2SA1576A106
Q613	23114499	TRANSISTOR, RN1404
Q650	23314993	TRANSISTOR, 2SC4081 Q
Q670	23906523	IC, TA8256BH
Q671	23205204	TRANSISTOR, NPN VEBO=25V KTC2875B-RTK
Q672	23205204	TRANSISTOR, NPN VEBO=25V KTC2875B-RTK
Q673	23205204	TRANSISTOR, NPN VEBO=25V KTC2875B-RTK
Q674	23205204	TRANSISTOR, NPN VEBO=25V KTC2875B-RTK
Q705	23114433	TRANSISTOR, 2SC1815-Y
Q706	23114433	TRANSISTOR, 2SC1815-Y
Q707	23114437	TRANSISTOR, 2SC752GTM-Y
Q709	23114433	TRANSISTOR, 2SC1815-Y
Q710	23114425	TRANSISTOR, 2SA1015-Y(TE
Q711	23314909	TRANSISTOR, 2SA1837
Q712	23314912	TRANSISTOR, 2SC4793
Q719	23114433	TRANSISTOR, 2SC1815-Y
Q720	23114433	TRANSISTOR, 2SC1815-Y
⚠Q801	23135047	IC, HYBRID IC STR-F6629B
Q805	23114498	TRANSISTOR, RN1405

Location No.	Parts No.	Description
Q831	23009546	IC, REGULATOR +5V 3% NJM2396F05D
Q832	23009549	IC, REGULATOR +9V 3% NJM2396F09D
Q833	23009967	IC, +5.0V 2% REG. TO220FP-3 BA50BC0T
Q834	23009546	IC, REGULATOR +5V 3% NJM2396F05D
Q838	23009976	IC, REGULATOR +3.3V 1% SSOP5 BH33FB1WG-TR
Q840	23135038	IC, MIP2900MPSCF
⚠Q841	23000823	IC, PHOTO COUPLER, TLP421F(GR)
⚠Q842	23000823	IC, PHOTO COUPLER, TLP421F(GR)
Q843	23314204	TRANSISTOR, 2SC2412K,Q
⚠Q862	23009270	IC, PHOTO COUPLER, PS2581L1(D)
⚠Q883	23009991	IC, ERROR AMP VS=133.7V TO220A SE133N, LF4
Q884	23314163	TRANSISTOR, 2SA1162-Y
Q901	23205159	TRANSISTOR, 2SC3942
Q902	23205165	TRANSISTOR, 2SC3950E
Q903	23205159	TRANSISTOR, 2SC3942
Q904	23205165	TRANSISTOR, 2SC3950E
Q905	23205159	TRANSISTOR, 2SC3942
Q906	23205165	TRANSISTOR, 2SC3950E
Q907	23114735	TRANSISTOR, 2SA102-Y(C)
Q908	23114429	TRANSISTOR, 2SC2120-Y(TE
Q930	23205158	TRANSISTOR, 2SC3790E
Q931	23205156	TRANSISTOR, 2SA1480E
Q933	23205158	TRANSISTOR, 2SC3790E
Q934	23205156	TRANSISTOR, 2SA1480E
Q936	23205158	TRANSISTOR, 2SC3790E
Q937	23205156	TRANSISTOR, 2SA1480E
Q961	23114433	TRANSISTOR, 2SC1815-Y
Q4021	23314475	TRANSISTOR, 2SC2712-Y
Q4022	23314163	TRANSISTOR, 2SA1162-Y
Q4460	23314204	TRANSISTOR, 2SC2412K,Q
Q4461	23314204	TRANSISTOR, 2SC2412K,Q
Q4466	23114498	TRANSISTOR, RN1405
Q4690	23314204	TRANSISTOR, 2SC2412K,Q
Q4710	23314163	TRANSISTOR, 2SA1162-Y
Q4711	23314204	TRANSISTOR, 2SC2412K,Q
Q4712	23314204	TRANSISTOR, 2SC2412K,Q
QB11	23114528	TRANSISTOR, 2SC1740S
QB30	23314204	TRANSISTOR, 2SC2412K,Q
QJ02	23000808	IC, LA6500
QJ03	23314962	TRANSISTOR, KTA1266 Y
QS01	23009916	IC, A S/W SSOP-36A MM1631AJBE
QS04	23114493	TRANSISTOR, RN2404
QS05	23205204	TRANSISTOR, NPN VEBO=25V KTC2875B-RTK
QS06	23205204	TRANSISTOR, NPN VEBO=25V KTC2875B-RTK
QS07	23205204	TRANSISTOR, NPN VEBO=25V KTC2875B-RTK
QS08	23205204	TRANSISTOR, NPN VEBO=25V KTC2875B-RTK
QS09	23114493	TRANSISTOR, RN2404
QS19	23314993	TRANSISTOR, 2SC4081 Q
QS41	23314993	TRANSISTOR, 2SC4081 Q
QS43	23314993	TRANSISTOR, 2SC4081
QS102	23906597	IC, BA4558F
QV009	23205014	TRANSISTOR, 2SC4667-O
QV01	23009940	IC, VIDEO S/W MM1630AQ
QV48	23314965	TRANSISTOR, KTC3198 Y
QV50	23314993	TRANSISTOR, 2SC4081 Q
QV51	23314993	TRANSISTOR, 2SC4081 Q
QV52	23314993	TRANSISTOR, 2SC4081 Q
QV54	23314993	TRANSISTOR, 2SC4081 Q
QV55	23314993	TRANSISTOR, 2SC4081 Q
QV56	23314993	TRANSISTOR, 2SC4081 Q
QV58	23314993	TRANSISTOR, 2SC4081 Q
QV59	23314993	TRANSISTOR, 2SC4081 Q
QV60	23314993	TRANSISTOR, 2SC4081 Q
QY160	23205006	TRANSISTOR, KTC4075Y
D101	23316755	DIODE, ZENER, MTZJ33C
D302	23357366	DIODE, FR105-B5

Location No.	Parts No.	Description
D303	23357366	DIODE, FR105-B5
D318	23118859	DIODE, 1SS133
D321	23316753	DIODE, ZENER, MTZJ33A
D327	23118515	DIODE, ZENER, RD11ESA B1
D330	23357457	DIODE, TVS VRWM=64V VBR=74.85V SA64ALF
D365	23118526	DIODE, ZENER, RD6.8ES B2
D372	23118859	DIODE, 1SS133
D373	23118859	DIODE, 1SS133
D404	23224366	DIODE, FMQ-3GU
D406	23357366	DIODE, FR105-B5
D412	23357366	DIODE, FR105-B5
D414	23357366	DIODE, FR105-B5
D415	23357366	DIODE, FR105-B5
D419	23118514	DIODE, ZENER, RD11ESA B2
D420	23118538	DIODE, ZENER, RD6.2ESA B2
D431	23118621	DIODE, ZENER, RD10ESA B3
D462	23316725	DIODE, ZENER, MTZJ15B
D465	23357366	DIODE, FR105-B5
D469	23118859	DIODE, 1SS133
D470	23316758	DIODE, ZENER, MTZJ36B
D471	23357366	DIODE, FR105-B5
D475	23118510	DIODE, ZENER, RD12ES
D476	23118859	DIODE, 1SS133
D481	23118859	DIODE, 1SS133
⚠ D484	23115774	DIODE, ZENER, RD6.2E(FA-1)
D485	23118516	DI0DE, ZENER, RD9.1ES B3
D490	23118859	DIODE, 1SS133
D601	23316740	DIODE, ZENER, MTZ J 22D
D612	23118041	DIODE, MA111
D613	23118041	DIODE, MA111
D614	23118041	DIODE, MA111
D660	23118041	DIODE, MA111
D661	23118041	DIODE, MA111
D662	23118041	DIODE, MA111
D663	23118041	DIODE, MA111
D664	23118041	DIODE, MA111
D670	23118041	DIODE, MA111
D671	23118041	DIODE, MA111
D672	23118041	DIODE, MA111
D673	23118041	DIODE, MA111
D674	23118041	DIODE, MA111
D675	23118041	DIODE, MA111
D698	23118041	DIODE, MA111
D704	23118859	DIODE, 1SS133
D705	23118859	DIODE, 1SS133
D715	23118859	DIODE, 1SS133
D721	23118859	DIODE, 1SS133
⚠ D801	23316393	DIODE, VRM=600V IO=6A SIP D5SB60, 4009 F05
D805	23118859	DIODE, 1SS133
D806	23357366	DIODE, FR105-B5
D807	23118859	DIODE, 1SS133
D809	23316746	DIODE, ZENER, MTZJ27B
⚠ D811	23357365	DIODE, 1N4004A-B5
⚠ D812	23357365	DIODE, 1N4004A-B5
⚠ D813	23357365	DIODE, 1N4004A-B5
⚠ D814	23357365	DIODE, 1N4004A-B5
D841	23316673	DIODE, ZENER, MTZJ5.6C
D842	23316665	DIODE, ZENER, MTZJ4.7A
D843	23118094	DIODE, EU2A
D845	23118859	DIODE, 1SS133
D846	23118633	DIODE, ZENER, RD3.0ES B2
D847	23118633	DIODE, ZENER, RD3.0ES B2
D848	23118859	DIODE, 1SS133
D855	23118859	DIODE, 1SS133
D883	23316803	DIODE, FMU-G16S
D885	23316714	DIODE, RL2Z

Location No.	Parts No.	Description
D891	23316768	DIODE, FMB-26L
D892	23357042	DIODE, FMX-12S(023-108)
⚠ D899	24019485	VARISTOR, TNR10V431K
D901	23118859	DIODE, 1SS133
D904	23118859	DIODE, 1SS133
D905	23118859	DIODE, 1SS133
D906	23118859	DIODE, 1SS133
D907	23118859	DIODE, 1SS133
D908	23118859	DIODE, 1SS133
D909	23118859	DIODE, 1SS133
D911	23357366	DIODE, FR105-B5
D916	23357012	DIODE, 1SS244
D917	23357012	DIODE, 1SS244
D918	23357012	DIODE, 1SS244
D919	23357012	DIODE, 1SS244
D921	23115337	DIODE, 1S1834
D926	23357012	DIODE, 1SS244
D927	23357012	DIODE, 1SS244
D928	23357012	DIODE, 1SS244
D929	23357012	DIODE, 1SS244
D949	23357012	DIODE, 1SS244
D950	23357012	DIODE, 1SS244
D951	23357012	DIODE, 1SS244
D952	23357012	DIODE, 1SS244
DB01	23358564	DIODE, LED, SLR-56VC3FPQ
DB03	23358522	DIODE, LED, SIR-56SB3F
DB05	23118538	DIODE, ZENER, RD6.2ESA B2
DB30	23316792	DIODE, SC215
DB31	23118859	DIODE, 1SS133 @U002
	23118859	DIODE, 1SS133 @UA02
DB36	23118529	DIODE, ZENER, RD5.6ES B2
DB37	23118529	DIODE, ZENER, RD5.6ES B2
DV70	23316591	DIODE, ZENER, MA8100-M
DV76	23316591	DIODE, ZENER, MA8100-M
KB01	23000852	IC, REMOTE PHOTO RECEIVER, PIC-37043TE2
MISCELLANEOUS		
B110	23940020	PIECE, BACK TERMINAL BOARD
B112	23940059	PIECE, COVER(BTB)
B251	23845859	HOLDER, WIRE, PVC-C0AT, L=70MM
BB03A	23713201	CONNECTOR, PLUG B-B 16P
BB04A	23713201	CONNECTOR, PLUG B-B 16P
BB05A	23713201	CONNECTOR, PLUG B-B 16P
BB06A	23713201	CONNECTOR, PLUG B-B 16P
BB07A	23713201	CONNECTOR, PLUG B-B 16P
BB08A	23713201	CONNECTOR, PLUG B-B 16P
BB09A	23713201	CONNECTOR, PLUG B-B 16P
BB09B	23713202	CONNECTOR, SOCKET B-B 16P
C999B	23960136	ADHESIVE, SILICONE, TSE3843-W
D404B	70391355	SCREW, BIND HEAD TAP-TITE B, BITTB 3X8 SZN
D404C	72131002	BEAD CORE, BF04RI3.5031.3
D404E	23960136	ADHESIVE, SILICONE, TSE3843-W
D4466	23316753	DIODE, ZENER, MTZJ33A
D801B	70391355	SCREW, BIND HEAD TAP-TITE B, BITTB 3X8 SZN
D883B	70391355	SCREW, BIND HEAD TAP-TITE B, BITTB 3X8 SZN
D8852	23316714	DIODE, RL2Z
D891B	70391355	SCREW, BIND HEAD TAP-TITE B, BITTB 3X8 SZN
D892B	70391355	SCREW, BIND HEAD TAP-TITE B, BITTB 3X8 SZN
E931	23974994	BAND, KESSOKU
⚠ F470	23144854	FUSE
F470A	23165433	FUSE HOLDER, 5.2 SOC
F470B	23165433	FUSE HOLDER, 5.2 SOC
⚠ F801	23144518	FUSE, CARTRIDGE, 125V 10A
F801A	23165433	FUSE HOLDER, 5.2 SOC
F801B	23165433	FUSE HOLDER, 5.2 SOC
⚠ F802	23144682	FUSE, 125V 5.0A, CARTRIDGE 5X20

Location No.	Parts No.	Description
F802A	23165433	FUSE HOLDER, 5.2 SOC
F802B	23165433	FUSE HOLDER, 5.2 SOC
⚠ F840	23144581	FUSE, AXIAL, 125V 200MA
⚠ F889	23144715	FUSE, AXIAL 125V 5.0A
⚠ F891	23144715	FUSE, AXIAL 125V 5.0A
⚠ F892	23144715	FUSE, AXIAL 125V 5.0A
G101	24011151	CHIP, METAL FILM, 1/20W 150 OHM J
G102	24011151	CHIP, METAL FILM, 1/20W 150 OHM J
G303	23103248	FERRITR CHOKE, TEM2014AA
G304	23103248	FERRITR CHOKE, TEM2014AA
G305	23103145	FERRITE CHOKE, TEM2011AA
G400	24946561	CARBON COMPOSITION, 1/2W 560 OHM K
G403	24946223	CARBON COMPOSITION GF 1/2W 22K K
G404	23103145	FERRITE CHOKE, TEM2011AA
G410	23316731	DIODE, ZENER, MTZJ18B
G416	24382820	OXIDE METAL FILM, 1W 82 OHM J
G499	24503361	PLASTIC FILM CQ921 M 100V 1200PF J
G811	23118859	DIODE, 1SS133
G815	24366332	CARBON FILM, 1/6W 3.3K OHM J
G908	24366560	CARBON FILM, 1/6W 56 OHM J
G914	23118859	DIODE, 1SS133
G915	23118859	DIODE, 1SS133
G923	24366560	CARBON FILM, 1/6W 56 OHM J
G924	23118859	DIODE, 1SS133
G925	23118859	DIODE, 1SS133
G941	24366560	CARBON FILM, 1/6W 56 OHM J
G947	23118859	DIODE, 1SS133
G948	23118859	DIODE, 1SS133
G951	24366102	CARBON FILM, 1/6W 1K OHM J
G966	24366102	CARBON FILM, 1/6W 1K OHM J
G9880	24366102	CARBON FILM, 1/6W 1K OHM J
GJ105	24000445	CHIP JUMPER, 1608TYPE
GJ107	24000445	CHIP JUMPER, 1608TYPE
GJ108	24000445	CHIP JUMPER, 1608TYPE
GJ170	24000445	CHIP JUMPER, 1608TYPE
GR103	24000445	CHIP JUMPER, 1608TYPE
GR392	24000445	CHIP JUMPER, 1608TYPE
GR650	24000445	CHIP JUMPER, 1608TYPE
GRS06	24000445	CHIP JUMPER, 1608TYPE
⚠ H002	23148083	IF MODULE, US VSD BUFFER 6MTRAP MVUS52A
H003	23124087	ANTENNA SWITCH, RSU135X1, 2I3O BUNPAI US
H003A	23740989	NUT, F-CONNECTOR 2H BS
J401A	23960136	ADHESIVE, SILICONE, TSE3843-W
M461A	23192957	ANODE CAP ASSY, TCC5602AT
M461B	23505090	CABLE, CABLE FOCUS
M461C	23505089	CABLE, FOCUS
M461D	23504719	CABLE, SCREEN
P105	23368578	CONNECTOR, PLUG 4P, 2.5MM G JST-EH, B4B-EH-F1-TV4
P602	23368578	CONNECTOR, PLUG 4P, 2.5MM G JST-EH, B4B-EH-F1-TV4
P603	23368577	CONNECTOR, PLUG, 3P 2.5MM G JST-EH, B3B-EH-F1-TV4
P701A	23368578	CONNECTOR, PLUG 4P, 2.5MM G JST-EH, B4B-EH-F1-TV4
P701B	23368578	CONNECTOR, PLUG 4P, 2.5MM G JST-EH, B4B-EH-F1-TV4
P703B	23368577	CONNECTOR, PLUG, 3P 2.5MM G JST-EH, B3B-EH-F1-TV4
⚠ P801	23372115	POWER CORD, U/C 125V10A HSV 4 CMC-02P 3
P801A	23103778	FERRITE CORE, TFE1008
P902B	23367068	CONNECTOR, PLUG 8P, 2.5MM G JST-EH B8B-EH-F1-TV4
P903A	23367069	CONNECTOR, PLUG, NP 2.5MM G JST-EH, B9B-EH-F1A
P903B	23367069	CONNECTOR, PLUG, NP 2.5MM G JST-EH, B9B-EH-F1A
P910	23164725	CONNECTOR, PLUG 2P @U002
	23845834	LEAD CLAMPER
PB01A	23368580	CONNECTOR, PLUG 6P, 2.5MM G JST-EH B6B-EH-F1-TV4
PJ01A	23368579	CONNECTOR, PLUG 5P, 2.5MM G JST-EH, B5B-EH-F1-TV4
PJ01B	23368579	CONNECTOR, PLUG 5P, 2.5MM G JST-EH, B5B-EH-F1-TV4
PJ901	23368577	CONNECTOR, PLUG, 3P 2.5MM G JST-EH, B3B-EH-F1-TV4
PV01	23023094	JACK, PIN 1S6P SMK LAP5120-0205FC

Location No.	Parts No.	Description
PV02	23365819	JACK, 1S3P @UA01
	23023096	JACK, PIN 10P SMK LAP5120-0401FC @U005
PV05	23023241	JACK, PIN 9P SMK LAP5120-0431F
PV12	23368578	CONNECTOR, PLUG 4P, 2.5MM G JST-EH, B4B-EH-F1-TV4
PV13	23367069	CONNECTOR, PLUG, NP 2.5MM G JST-EH, B9B-EH-F1A
PV14	23367068	CONNECTOR, PLUG 8P, 2.5MM G JST-EH B8B-EH-F1-TV4
PV15	23368577	CONNECTOR, PLUG, 3P 2.5MM G JST-EH, B3B-EH-F1-TV4
Q404B	23850638	INSULATOR, TRANSISTOR, AC263
Q404D	70391355	SCREW, BIND HEAD TAP-TITE B, BITTB 3X8 SZN
Q418B	70391355	SCREW, BIND HEAD TAP-TITE B, BITTB 3X8 SZN
Q430B	70391355	SCREW, BIND HEAD TAP-TITE B, BITTB 3X8 SZN
Q670B	70391355	SCREW, BIND HEAD TAP-TITE B, BITTB 3X8 SZN
Q831B	70391355	SCREW, BIND HEAD TAP-TITE B, BITTB 3X8 SZN
Q832B	70391355	SCREW, BIND HEAD TAP-TITE B, BITTB 3X8 SZN
Q833B	70391355	SCREW, BIND HEAD TAP-TITE B, BITTB 3X8 SZN
Q834B	70391355	SCREW, BIND HEAD TAP-TITE B, BITTB 3X8 SZN
QJ02B	70391355	SCREW, BIND HEAD TAP-TITE B, BITTB 3X8 SZN
SA01	23145227	SWITCH, PUSH, 1C1P
SA02	23145227	SWITCH, PUSH, 1C1P
SA03	23145227	SWITCH, PUSH, 1C1P
SA04	23145227	SWITCH, PUSH, 1C1P
SA05	23344335	SWITCH
SA06	23145227	SWITCH, PUSH, 1C1P
SA07	23145227	SWITCH, PUSH, 1C1P
⚠ SR81	23146574	RELAY, DLS5D1-O(M) 0.15W
⚠ SR83	23146564	RELAY, DC12V, TV5, DG-3
⚠ V901A	23903145	SOCKET, CRT, WFOCUS ISD35SE INCHANG ISD-35S-E
W661	23351156	SPEAKER, SPK1410AM, 60X120 8-OHM 10W
W662	23351156	SPEAKER, SPK1410AM, 60X120 8-OHM 10W
W663	23351194	SPEAKER, SPK1392BO
Z401	23140203	SPARK GAP, 2.0-3.0KV C-010, AG20PC152F-L3N
PC BOARD ASSEMBLIES		
✻ U001	23148104	HYPER SIGNAL MODUL, MHSU01
✻ U002	23762322	PC BOARD ASSY, POW/DEF PD1706B
✻ U004	23762324	PC BOARD ASSY, CRT-D/S PD1816A
✻ U005	23762323	PC BOARD ASSY, AV TERMINAL PWU PD1708B
✻ UA01	23761897	PC BOARD ASSY, CONT PWU PD1709-1
✻ UA02	23761898	PC BOARD ASSY, LED PWU PD1709-2
✻ UV02	23148056	SCAN CONVERTER MODUL, 03DVI-2 MHDM02
PICTURE TUBE		
⚠ V901	23324106	PICTURE TUBE, 34VPF MTPD ITC W86MAG183X30
TUNER		
⚠ H001	23321497	TUNER, US181CH IIC PH 5V SANYO ELA52LX6
⚠ HY01	23321480	TUNER, TIF US IIC PH 181CH 5V ENG36A18GF
ACCESSORIES		
A701	23067638	CARTON, CARTON TNP 34HFX84
A703	23946748	PACKING, TOP PACKING
A708	23946749	PACKING, BOTTOM PACKING
⚠ K912	23306504	REMOCON HAND UNIT IR, CTVUSA CT-90164
⚠ Y101	23566372	OWNERS MANUAL, ENGLISH/FRENCH 34HFX84
CABINET PARTS		
⚠ A201	23532771	COVER, F.CVR.ASSY 34HFX84
A286	23845834	LEAD CLAMPER
A302	23538478	MARK, TOSHIBA MARK W=56 36DX100
A303	23929741	PIECE, HOLDER BUTTON 32D3000
A401	23532913	COVER, BACK COVER ASSY 34HFX84
A902	23428287	DOOR, DOOR
A903	23451976	PUSH CATCH, CLICK
A904	23445824	BUTTON, BUTTON POWER FACE
A904B	23445721	BUTTON, BUTTON POWER REAR 32D4000

SCAN CONVERTER MODUL (UV02)

BOTTOM (FOIL) SIDE

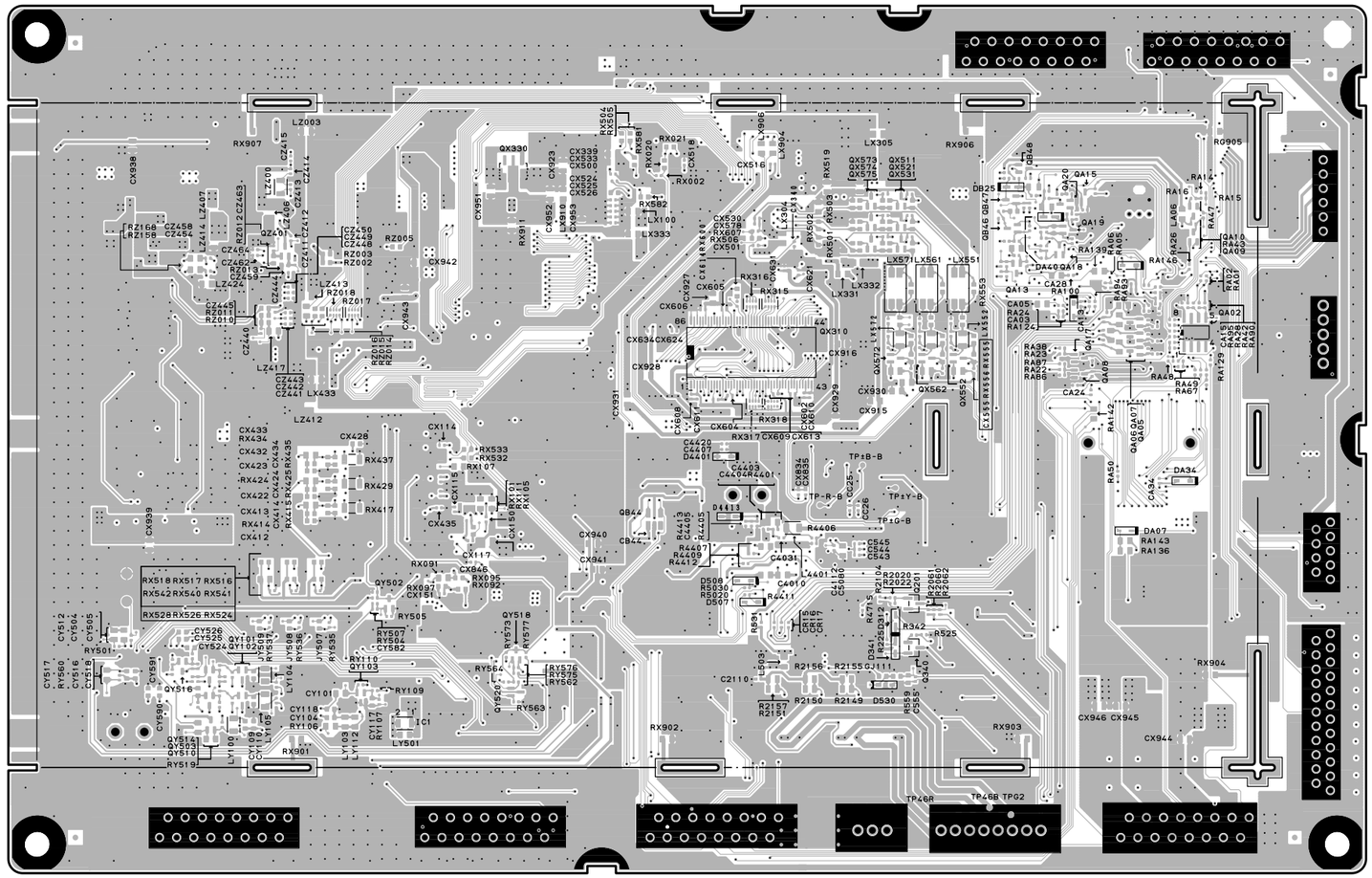

SCAN CONVERTER MODUL (UV02)

TOP (COMPONENT) SIDE

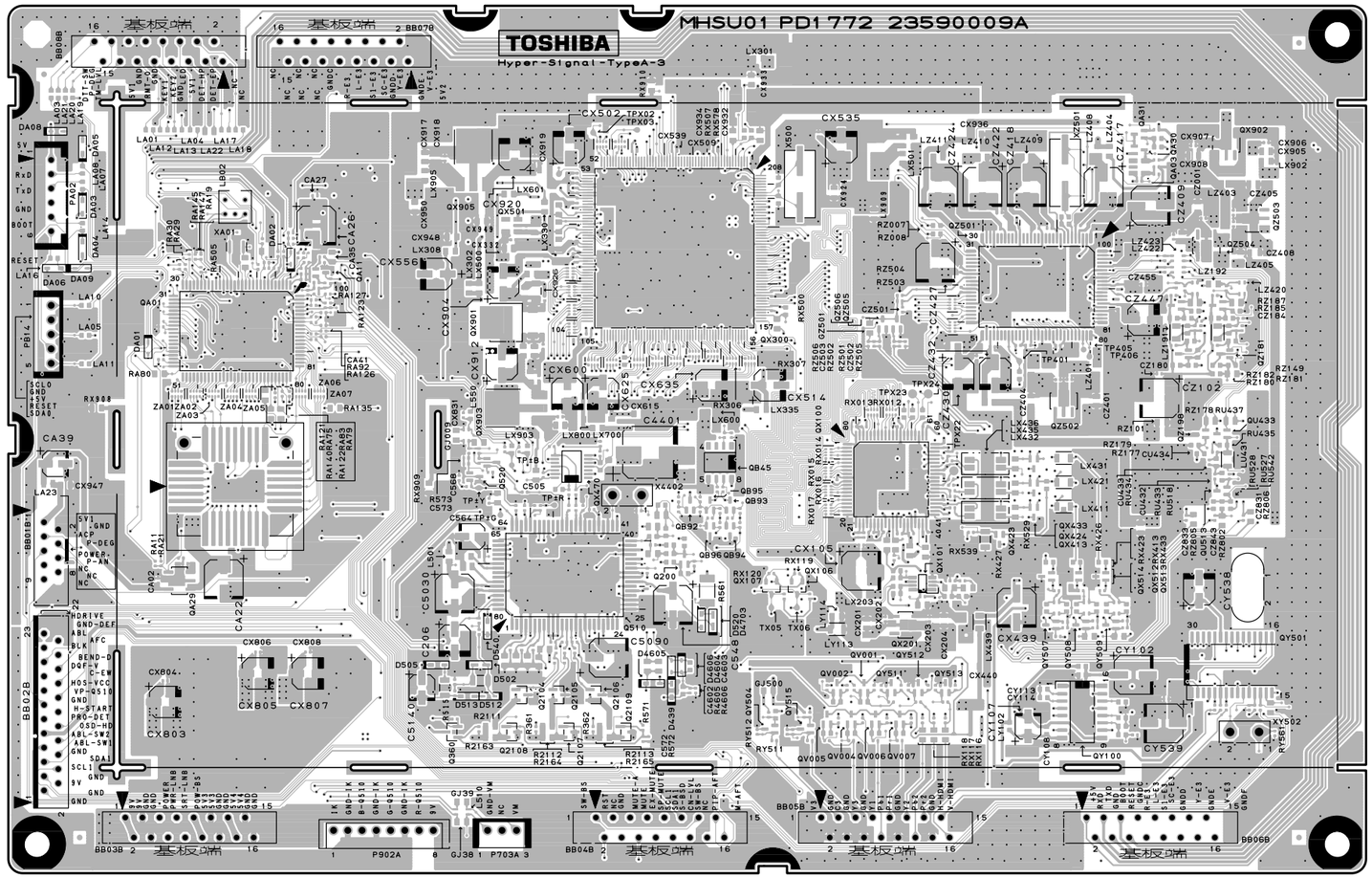

POWER/DEF BOARD PD1706B (U002)

BOTTOM (FOIL) SIDE

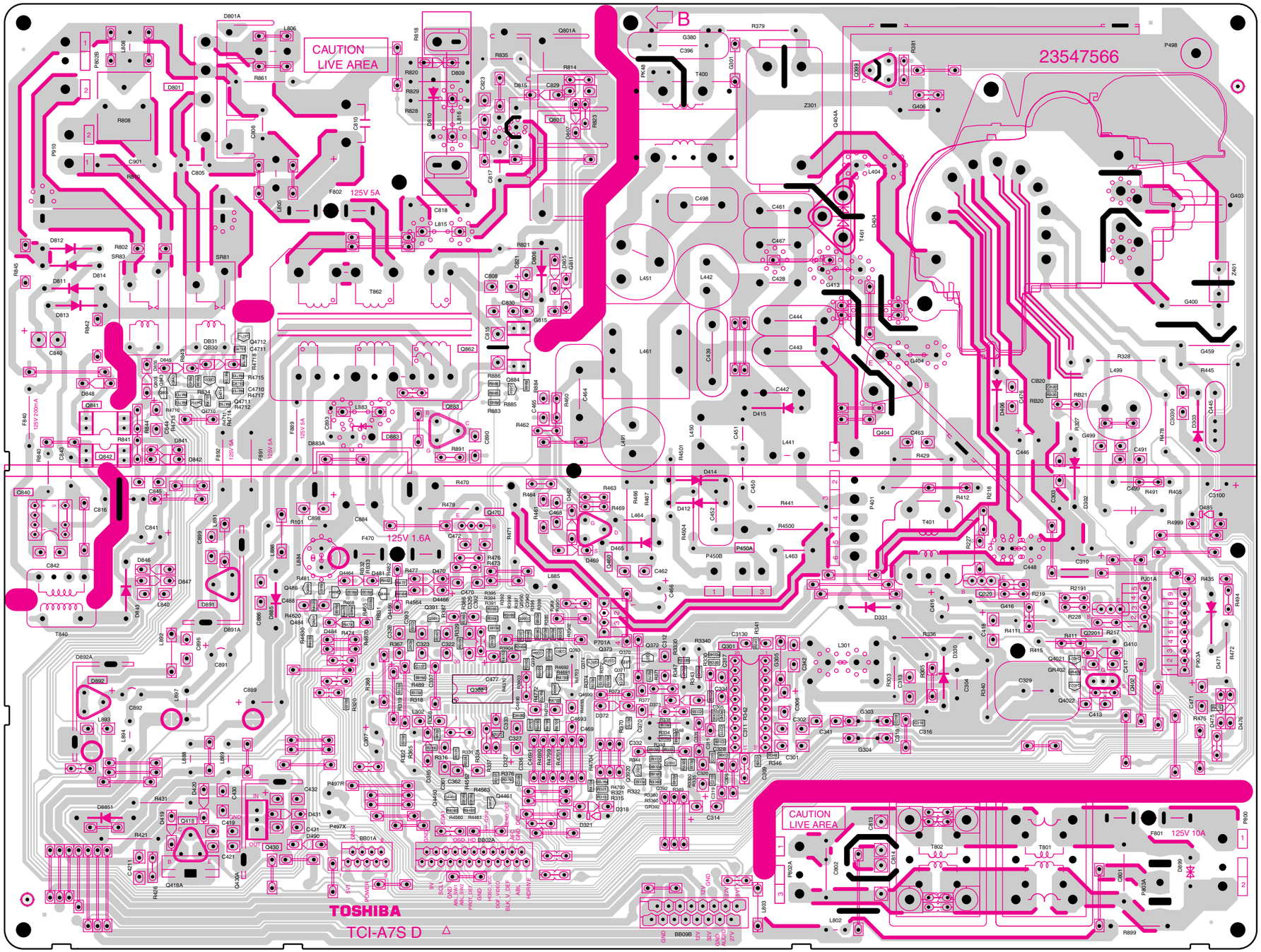

CONT BOARD PD1709-1 (UA01)

BOTTOM (FOIL) SIDE

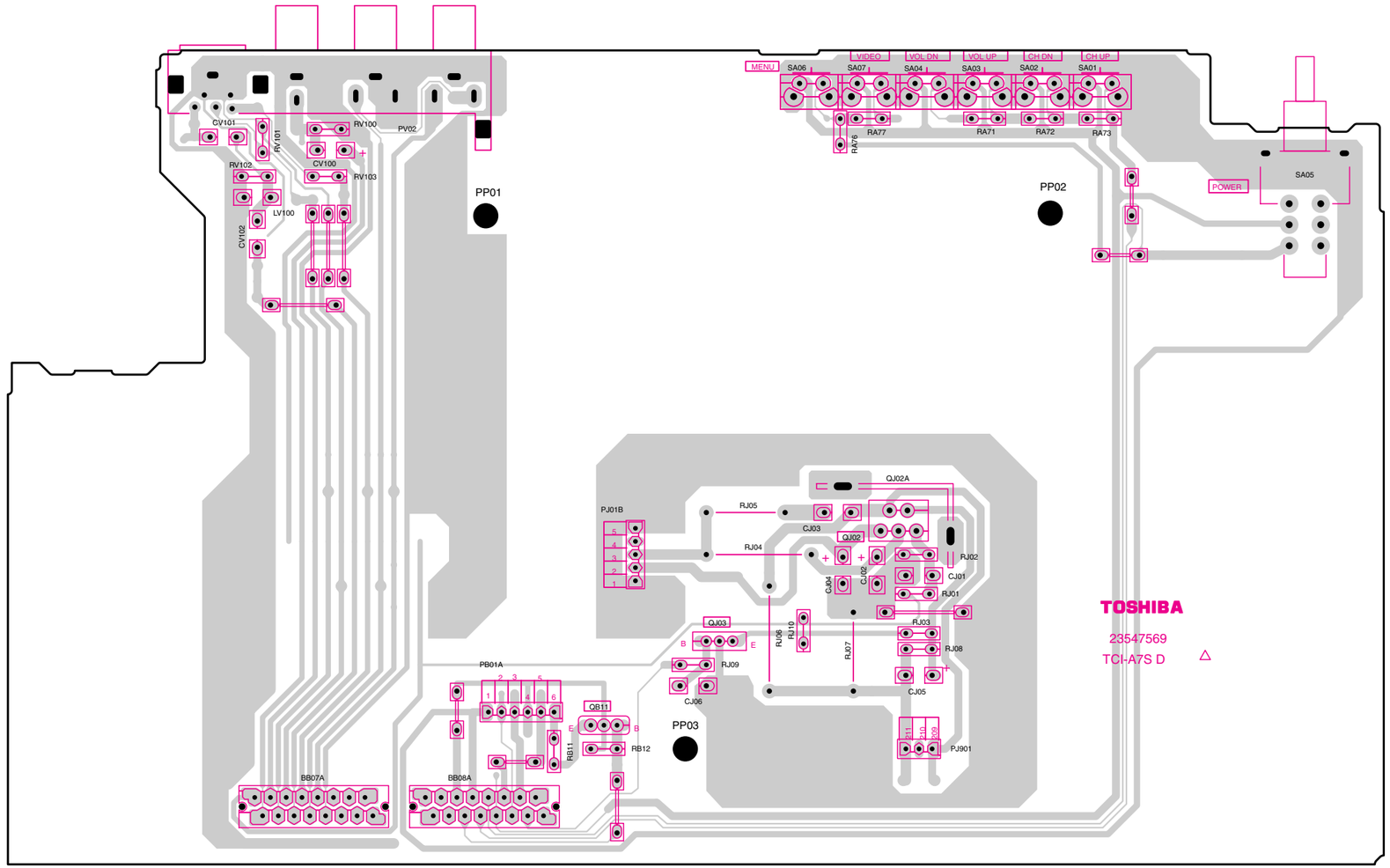

AV TERMINAL BOARD PD1708B (U005)

BOTTOM (FOIL) SIDE

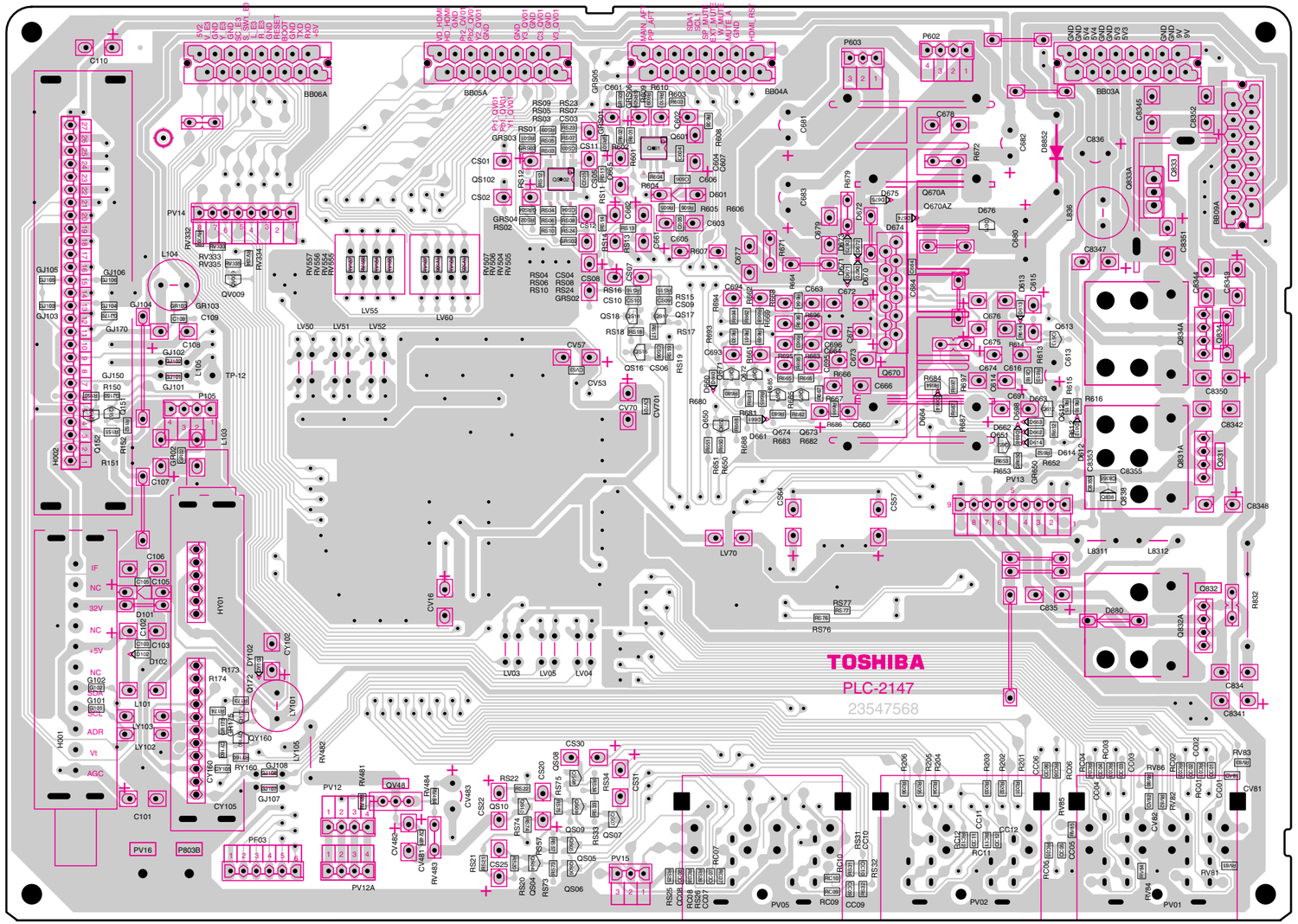

AV TERMINAL BOARD PD1708B (U005)

TOP (COMPONENT) SIDE

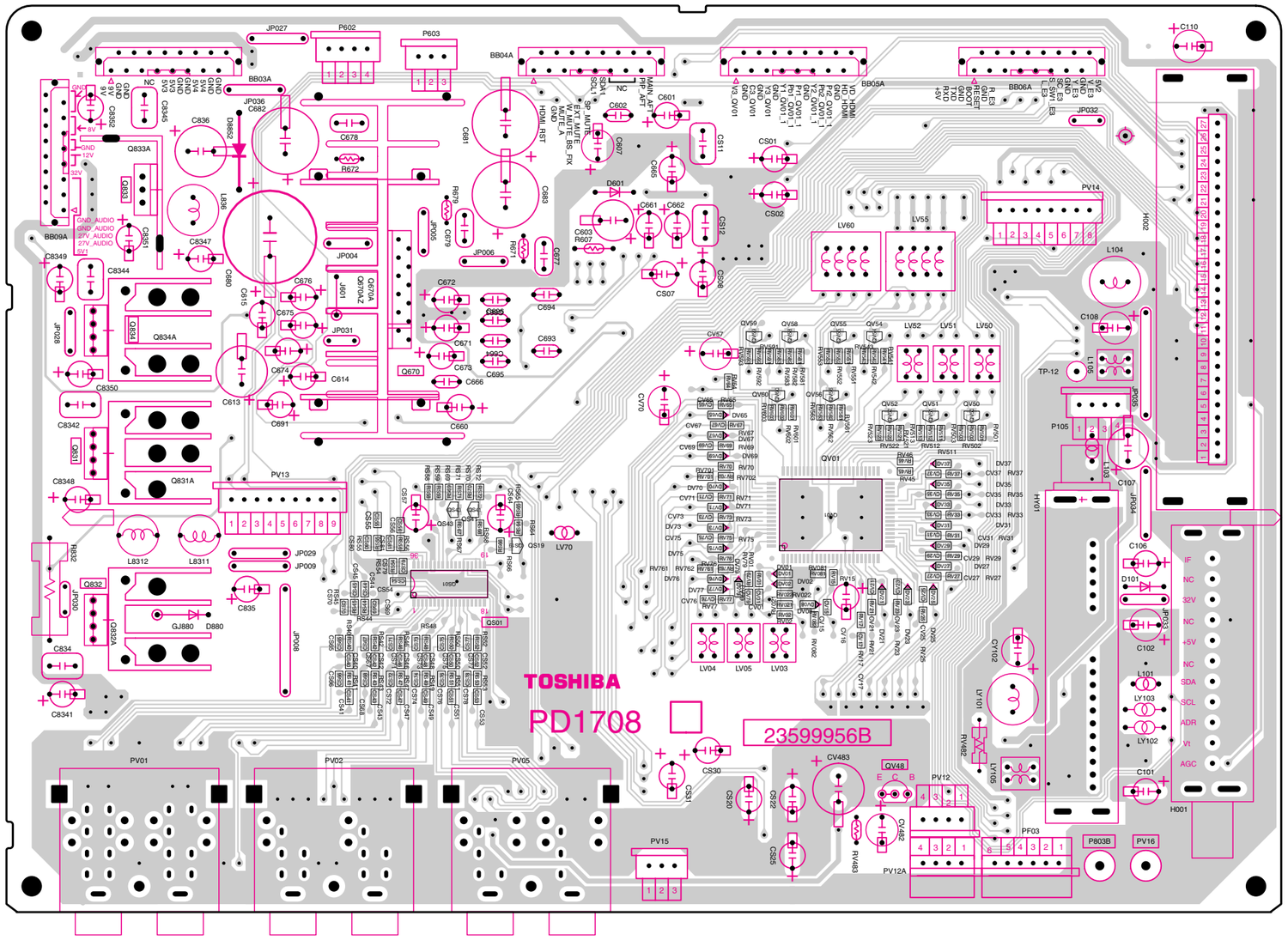

LED BOARD PD1709-2 (UA02)

BOTTOM (FOIL) SIDE

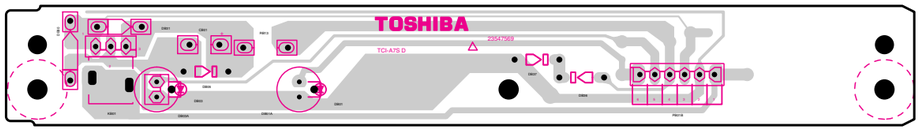

CRT-D/SVM BOARD PD1816A (U004)

BOTTOM (FOIL) SIDE

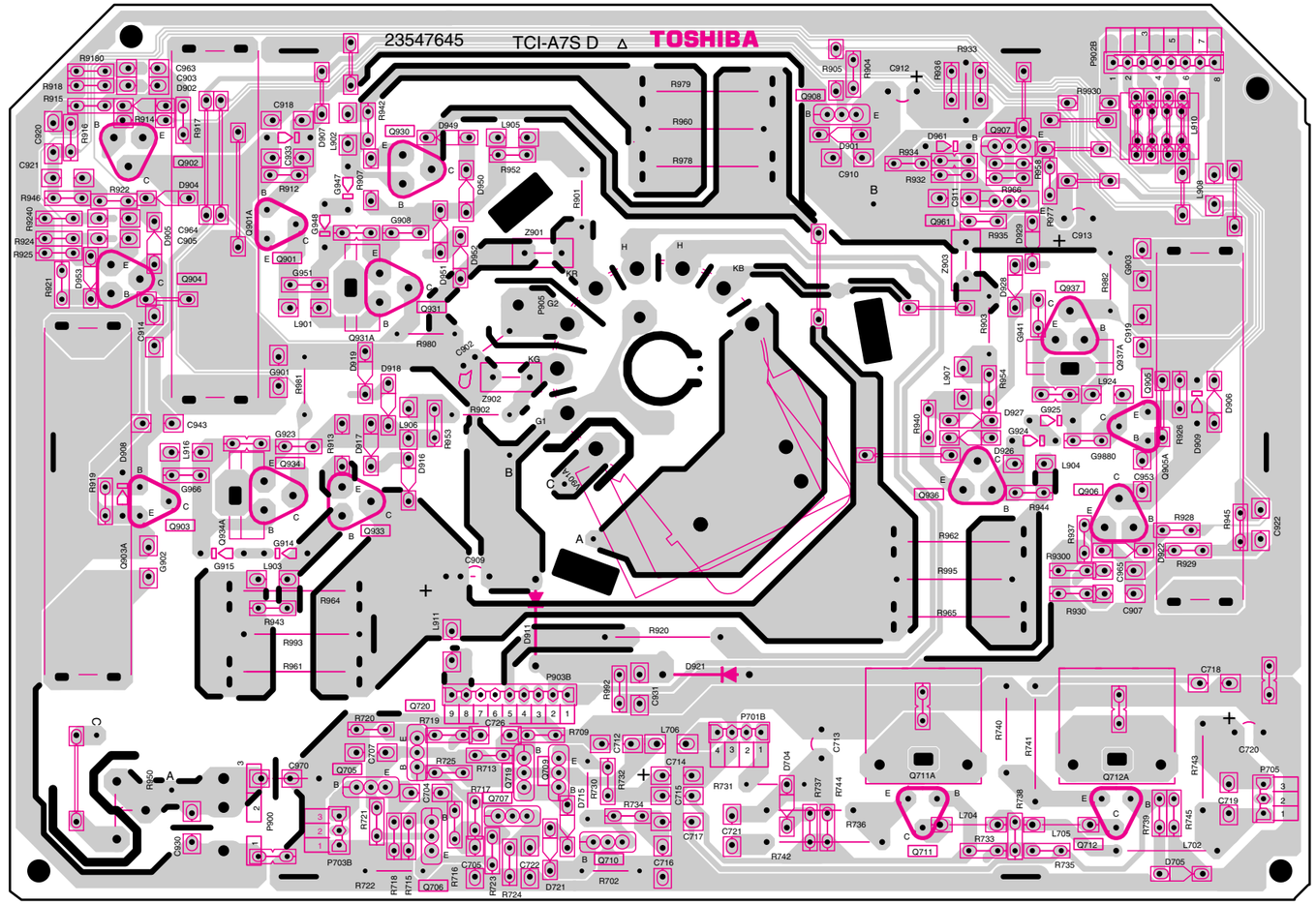

TERMINAL VIEW OF TRANSISTORS

① 2SD2253
(old)
2SC5243

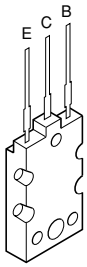

② 2SC3852
2SD1763A
2SC1569
2SC4544
2SA1788
2SA1306
2SA1186A

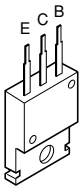

③ 2SC752GTM
2SC2482
2SC2655
2SC4721P

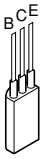

④ 2SC752
2SA562TM
2SA1015
2SC1815
2SC2878
2SC1740S
2SC2120
2SA9335

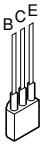

⑤ 2SA1788

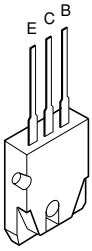

⑥ RN2203
RN2201
RN2004
RN1203
RN1204
RN2204
RN1205
RN1202
RN1201

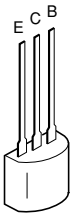

⑦ 2SD1554
2SD2253
2SD1556
2SC5143
2SC5570
2SD2553

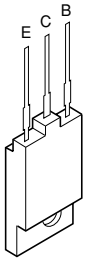

⑧ ON4409

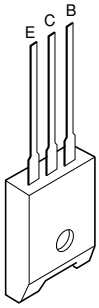

SCHEMATIC DIAGRAM

MODEL : 34HFX84

WARNING: BEFORE SERVICING THIS CHASSIS, READ THE "X-RAY RADIATION PRECAUTION", "SAFETY PRECAUTION" AND "PRODUCT SAFETY NOTICE" ON THE MANUAL FOR THIS MODEL.

CAUTION: The international hazard symbols "⚠" in the schematic diagram and the parts list designate components which have special characteristics important for safety and should be replaced only with types identical to those in the original circuit or specified in the parts list. The mounting position of replacements is to be identical with originals. Before replacing any of these components, read carefully the PRODUCT SAFETY NOTICE on the MANUAL for this model. Do not degrade the safety of the receiver through improper servicing.

NOTE:

1. RESISTOR — Resistance is shown in ohm [K = 1.000, M = 1.000.000]. All resistors are 1/6W and 5% tolerance carbon resistor, unless otherwise noted as the following marks.
   1/2R = Metal or Metal oxide of 1/2 watt — 1/2S = Carbon compsistion of 1/2 watt
   1RF = Fuse resistor of 1 watt — 10W = Cement of 10 watt
   K = ±10% G = ±2% F = ±1%
2. CAPACITOR — Unless otherwise noted in schematic, all capacitor values less than 1 are expressed in μF, and the values more than 1 in pF.
   All capacitors are ceramic 50V, unless otherwise noted as the following marks.
   Electolytic capacitor — Mylar capacitor
3. The parts indicated with "⚠" have special characteristics, and should be replaced with identical parts only.
4. Voltages read with DIGITAL MULTI-METER from point indicated to chassing ground, using a color bar signal with all controls at normal, line voltage at 220 volts.
5. Waveforms are taken receiving color bar signal with enough sensitivity.
6. Voltage reading shown are nominal values and may vary ±20% except H.V.

■ SCHEMATIC DIAGRAM STRUCTURE:

HYPER SIGNAL
- AV.....1/53
- BEP
  - (1/3) [SHEET-1/3].....2/53
  - (2/3) [SHEET-2/3].....3/53
  - (3/3) [SHEET-3/3].....4/53
- MICON
  - (1/8) [SHEET-1/8].....5/53
  - (2/8) [SHEET-2/8].....6/53
  - (3/8) [SHEET-3/8].....7/53
  - (4/8) [SHEET-4/8].....8/53
  - (5/8) [SHEET-5/8].....9/53
  - (6/8) [SHEET-6/8].....10/53
  - (7/8) [SHEET-7/8].....11/53
  - (8/8) [SHEET-8/8].....12/53
- G-Hyper
  - (1/3) [SHEET-1/3].....13/53
  - (2/3) [SHEET-2/3].....14/53
  - (3/3) [SHEET-3/3].....15/53
- AD-CONVERTER
  - (A) [SHEET-1/3].....16/53
  - (B) [SHEET-2/3].....17/53
  - (C) [SHEET-3/3].....18/53
- TC90A92A-1.....19/53
- TC90A92A-2.....20/53
- GC-REG.....21/53
- TC90A92A-3.....22/53
- GNESIS
  - (1/3) [SHEET-1/3].....23/53
  - (2/3) [SHEET-2/3].....24/53
  - (3/3) [SHEET-3/3].....25/53
- SDRAM (Gm6010).....26/53
- GNESIS OUT.....27/53
- GNESIS REG.....28/53
- CPU.....29/53
- PIP.....30/53
- Color Dec.
  - (1/3) [SHEET-1/3].....31/53
  - (2/3) [SHEET-2/3].....32/53
  - (3/3) [SHEET-3/3].....33/53
- Connector
  - (1/3) [SHEET-1/3].....34/53
  - (2/3) [SHEET-2/3].....35/53
  - (3/3) [SHEET-3/3].....36/53

AV_Terminal
- (BANKAN) [SHEET-1/7].....37/53
- (Tuner/IF_TIF) [SHEET-2/7].....38/53
- (JACK) [SHEET-3/7].....39/53
- (V_SW) [SHEET-4/7].....40/53
- (A_SW) [SHEET-5/7].....41/53
- (AUDIO_OUT) [SHEET-6/7].....42/53
- (REG) [SHEET-7/7].....43/53

POWER/DEF
- (CONNECTOR) [SHEET-1/6].....44/53
- (EW&VERTICAL) [SHEET-2/6].....45/53
- (HORIZONTAL) [SHEET-3/6].....46/53
- (PROTECTOR) [SHEET-4/6].....47/53
- (MAIN POWER) [SHEET-5/6].....48/53
- (SUB POWER) [SHEET-6/6].....49/53

CRT-D
- (1/2) [SHEET-1/2].....50/53
- (2/2) [SHEET-1/2].....51/53

CONTROL.....52/53

LED.....53/53

CIRCUIT BLOCK DIAGRAM (MAIN)

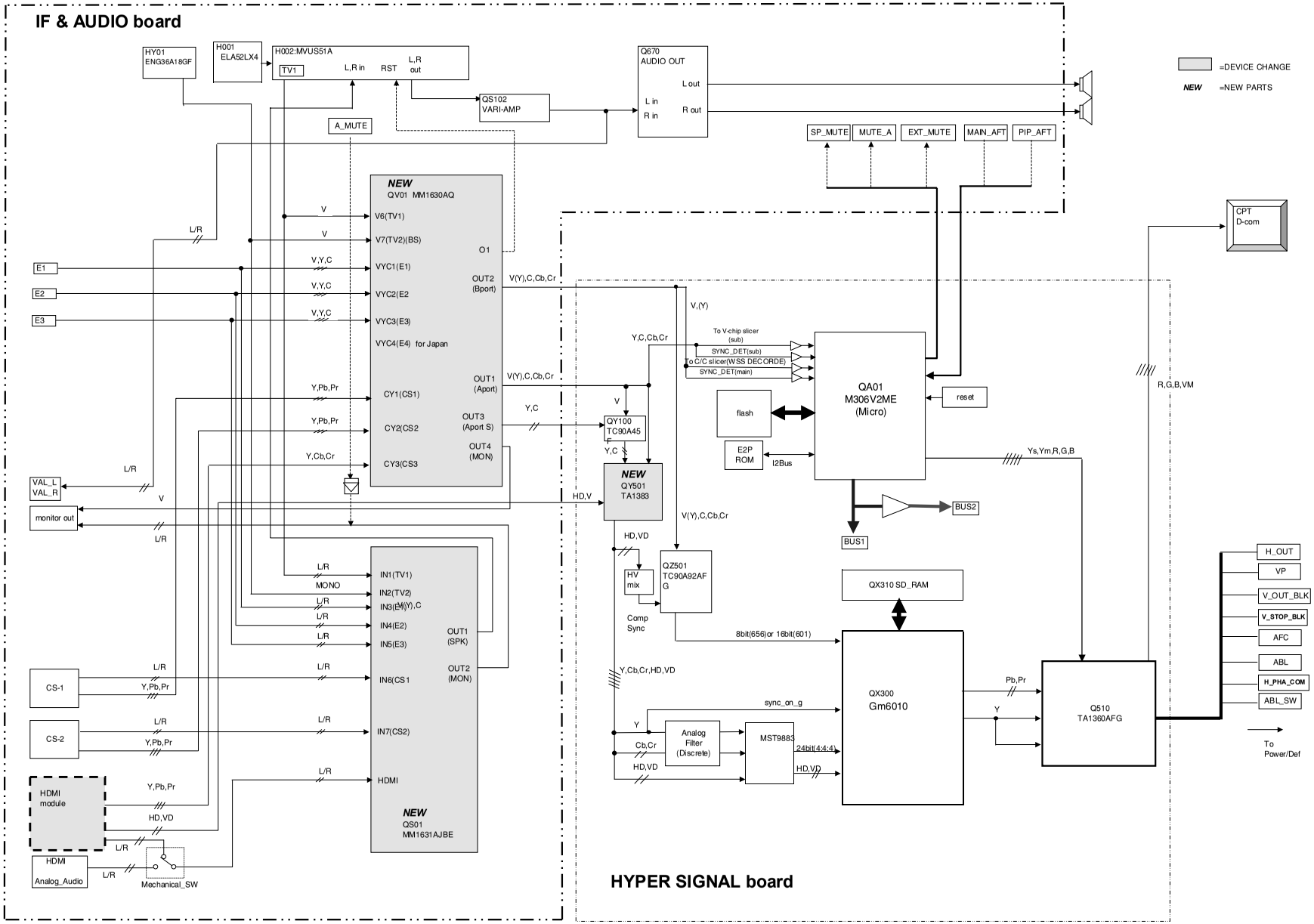

CIRCUIT BLOCK DIAGRAM (POWER SUPPLY)

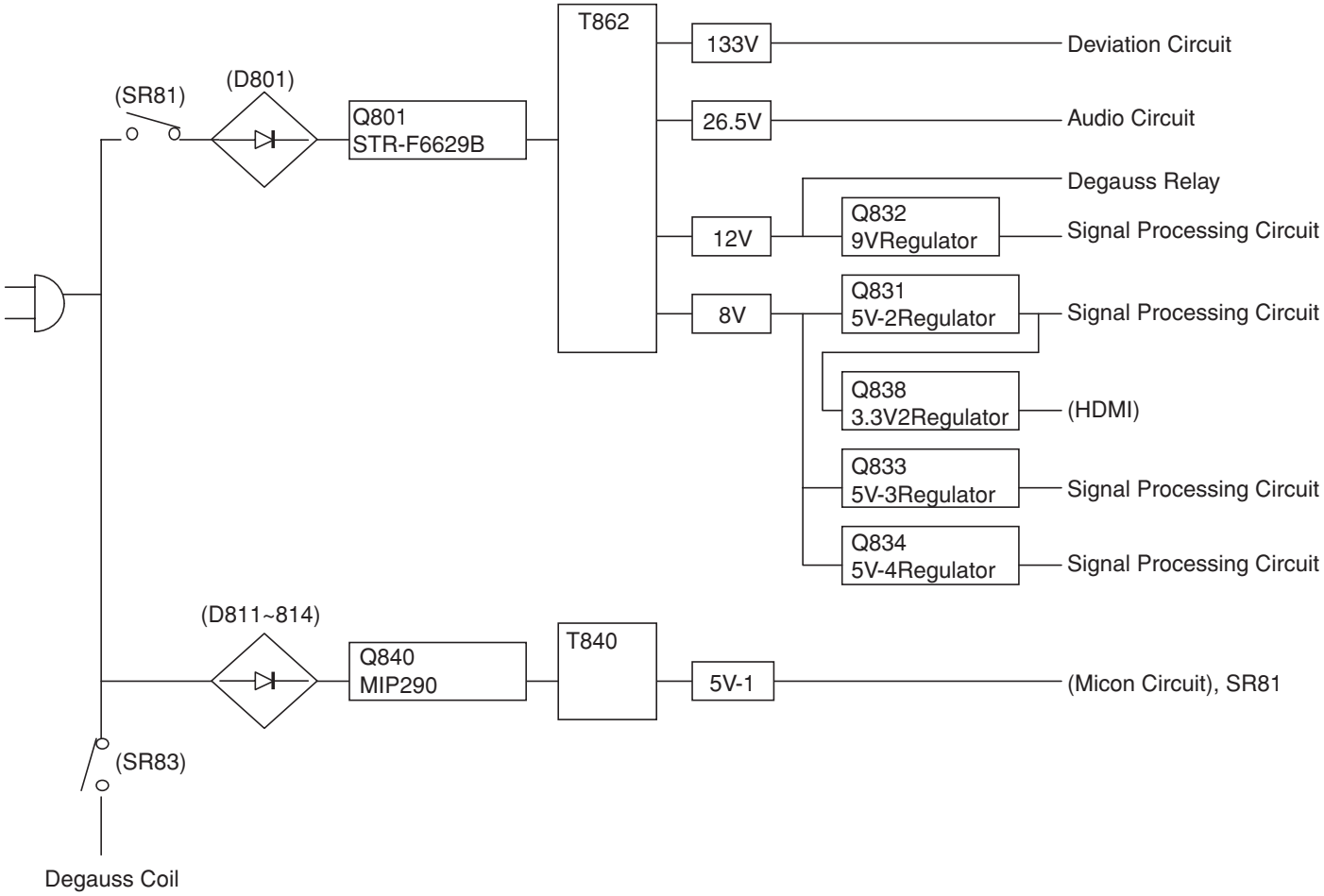

Specifications

• Note: This model complies with the specifications listed below. Designs and specifications are subject to change without notice. This model may not be compatible with features and/or specifications that may be added in the future.

Television System
NTSC standard

Channel Coverage
VHF: 2 through 13
UHF: 14 through 69
Cable TV: Mid band (A-8 through A-1, A through I)
Super band (J through W)
Hyper band (AA through ZZ, AAA, BBB)
Ultra band (65 through 94, 100 through 125)

Power Source
120 V AC, 60 Hz

Power Consumption
185 W (average)

Audio Power
10 W + 10 W + 13 W sub-woofer

Speaker Type
Two 6x12 cm + One 10 cm round sub-woofer

Video/Audio Terminals
S-VIDEO INPUT
Y : 1 V(p-p), 75 ohms, negative sync.
C : 0.286 V(p-p) (burst signal), 75 ohms
VIDEO/AUDIO INPUT
VIDEO: 1 V(p-p), 75 ohms, negative sync.
AUDIO: 150 mV(rms) (30% modulation equivalent, 22 k ohms or more)
ColorStream® (component video) INPUT
Y : 1V(p-p), 75 ohms
PR: 0.7 V(p-p), 75 ohms
PB: 0.7 V(p-p), 75 ohms
AUDIO: 150 mV(rms), 22 k ohms or more
VIDEO/AUDIO OUTPUT
VIDEO: 1 V(p-p), 75 ohms, negative sync.
AUDIO: 150 mV(rms) (30% modulation equivalent, 2.2 k ohms or less)
VARIABLE AUDIO OUTPUT
0–300 mV(rms) (30% modulation equivalent, 2.2 k ohms or less)

Video/Audio Terminals (cont.)
HDMI INPUT:
HDMI 1, HDMI 2 compliant (type A connector)
HDCP compliant
E-EDID* compliant
Suggested scan rates: 1080i, 480p, 480i, 720p
HDMI Audio: 2-channel PCM
32/44.1/48 kHz sampling frequency
16/20/24 bits per sample

Dimensions
Width 33 5/8 inches (854 mm)
Height 24-3/8 inches (619 mm)
Depth 23-3/4 inches (603 mm)

Mass
160 lbs (72.6 kg)

Operating condition
Temperature: 41°F-95°F (5°C-35°C)

Supplied Accessories
Remote Control with 2 size “AA” alkaline batteries

Optional TV Stand
ST34W64

– END –

TOSHIBA

FILE NO. 020-200414

CIRCUIT DIAGRAMS

Color Television

34HFX84

DOCUMENT CREATED IN JAPAN, July, 2004

SCHEMATIC DIAGRAM

MODEL : 34HFX84

WARNING: BEFORE SERVICING THIS CHASSIS, READ THE "X-RAY RADIATION PRECAUTION", "SAFETY PRECAUTION" AND "PRODUCT SAFETY NOTICE" ON THE MANUAL FOR THIS MODEL.

CAUTION: The international hazard symbols "⚠" in the schematic diagram and the parts list designate components which have special characteristics important for safety and should be replaced only with types identical to those in the original circuit or specified in the parts list. The mounting position of replacements is to be identical with originals. Before replacing any of these components, read carefully the PRODUCT SAFETY NOTICE on the MANUAL for this model. Do not degrade the safety of the receiver through improper servicing.

NOTE:

1. RESISTOR — Resistance is shown in ohm [K = 1.000, M = 1.000.000]. All resistors are 1/6W and 5% tolerance carbon resistor, unless otherwise noted as the following marks.
   1/2R = Metal or Metal oxide of 1/2 watt — 1/2S = Carbon compsistion of 1/2 watt
   1RF = Fuse resistor of 1 watt — 10W = Cement of 10 watt
   K = ±10% G = ±2% F = ±1%
2. CAPACITOR — Unless otherwise noted in schematic, all capacitor values less than 1 are expressed in μF, and the values more than 1 in pF.
   All capacitors are ceramic 50V, unless otherwise noted as the following marks.
   Electolytic capacitor Mylar capacitor
3. The parts indicated with "⚠" have special characteristics, and should be replaced with identical parts only.
4. Voltages read with DIGITAL MULTI-METER from point indicated to chassing ground, using a color bar signal with all controls at normal, line voltage at 220 volts.
5. Waveforms are taken receiving color bar signal with enough sensitivity.
6. Voltage reading shown are nominal values and may vary ±20% except H.V.

■ SCHEMATIC DIAGRAM STRUCTURE:

HYPER SIGNAL
- AV.....1/53
- BEP
  - (1/3) [SHEET-1/3].....2/53
  - (2/3) [SHEET-2/3].....3/53
  - (3/3) [SHEET-3/3].....4/53
- MICON
  - (1/8) [SHEET-1/8].....5/53
  - (2/8) [SHEET-2/8].....6/53
  - (3/8) [SHEET-3/8].....7/53
  - (4/8) [SHEET-4/8].....8/53
  - (5/8) [SHEET-5/8].....9/53
  - (6/8) [SHEET-6/8].....10/53
  - (7/8) [SHEET-7/8].....11/53
  - (8/8) [SHEET-8/8].....12/53
- G-Hyper
  - (1/3) [SHEET-1/3].....13/53
  - (2/3) [SHEET-2/3].....14/53
  - (3/3) [SHEET-3/3].....15/53
- AD-CONVERTER
  - (A) [SHEET-1/3].....16/53
  - (B) [SHEET-2/3].....17/53
  - (C) [SHEET-3/3].....18/53
- TC90A92A-1.....19/53
- TC90A92A-2.....20/53
- GC-REG.....21/53
- TC90A92A-3.....22/53
- GNESIS
  - (1/3) [SHEET-1/3].....23/53
  - (2/3) [SHEET-2/3].....24/53
  - (3/3) [SHEET-3/3].....25/53
- SDRAM (Gm6010).....26/53
- GNESIS OUT.....27/53
- GNESIS REG.....28/53
- CPU.....29/53
- PIP.....30/53
- Color Dec.
  - (1/3) [SHEET-1/3].....31/53
  - (2/3) [SHEET-2/3].....32/53
  - (3/3) [SHEET-3/3].....33/53
- Connector
  - (1/3) [SHEET-1/3].....34/53
  - (2/3) [SHEET-2/3].....35/53
  - (3/3) [SHEET-3/3].....36/53

AV_Terminal
- (BANKAN) [SHEET-1/7].....37/53
- (Tuner/IF_TIF) [SHEET-2/7].....38/53
- (JACK) [SHEET-3/7].....39/53
- (V_SW) [SHEET-4/7].....40/53
- (A_SW) [SHEET-5/7].....41/53
- (AUDIO_OUT) [SHEET-6/7].....42/53
- (REG) [SHEET-7/7].....43/53

POWER/DEF
- (CONNECTOR) [SHEET-1/6].....44/53
- (EW&VERTICAL) [SHEET-2/6].....45/53
- (HORIZONTAL) [SHEET-3/6].....46/53
- (PROTECTOR) [SHEET-4/6].....47/53
- (MAIN POWER) [SHEET-5/6].....48/53
- (SUB POWER) [SHEET-6/6].....49/53

CRT-D
- (1/2) [SHEET-1/2].....50/53
- (2/2) [SHEET-1/2].....51/53

CONTROL.....52/53

LED.....53/53

CIRCUIT BLOCK DIAGRAM (MAIN)

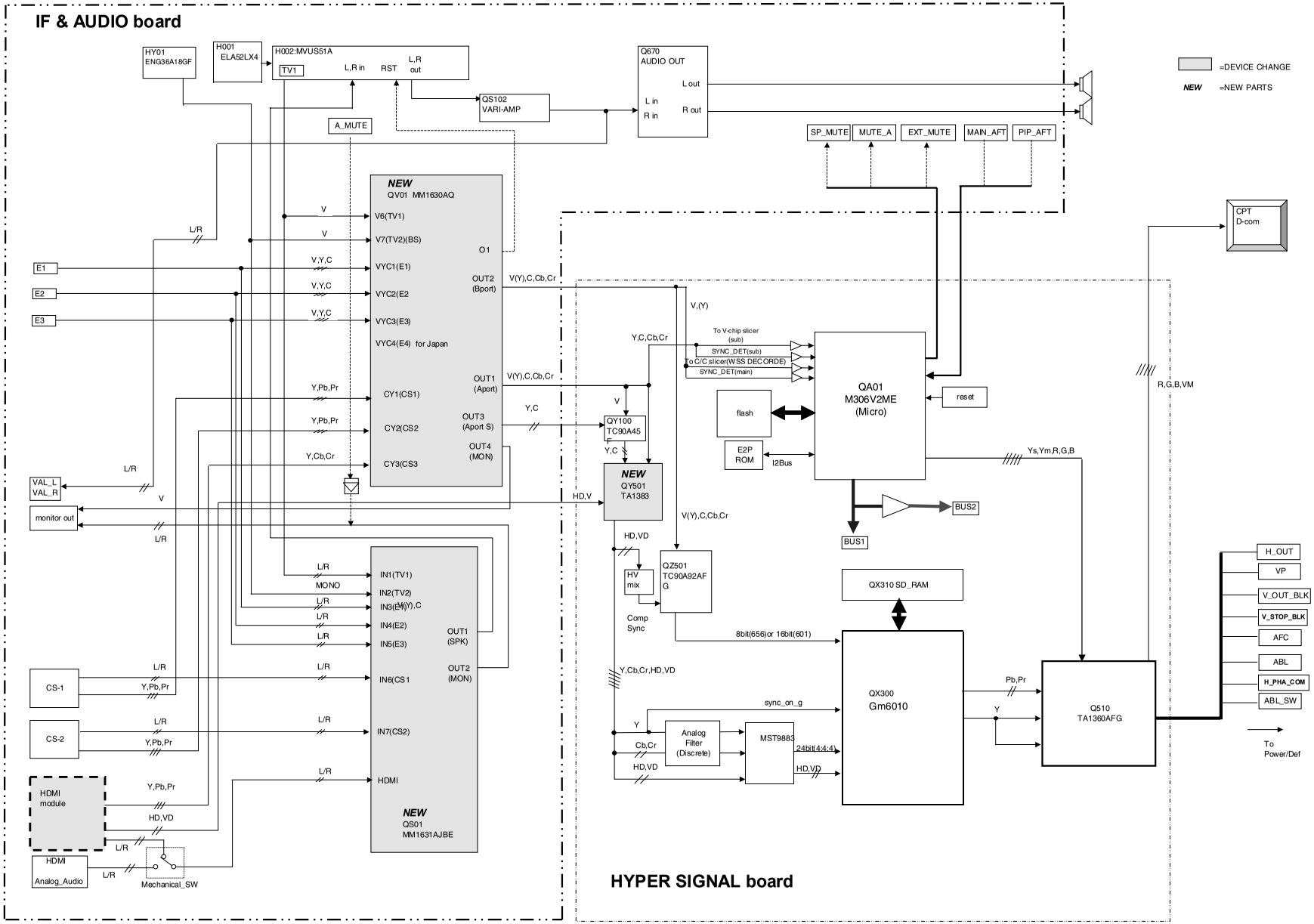

CIRCUIT BLOCK DIAGRAM (POWER SUPPLAY)

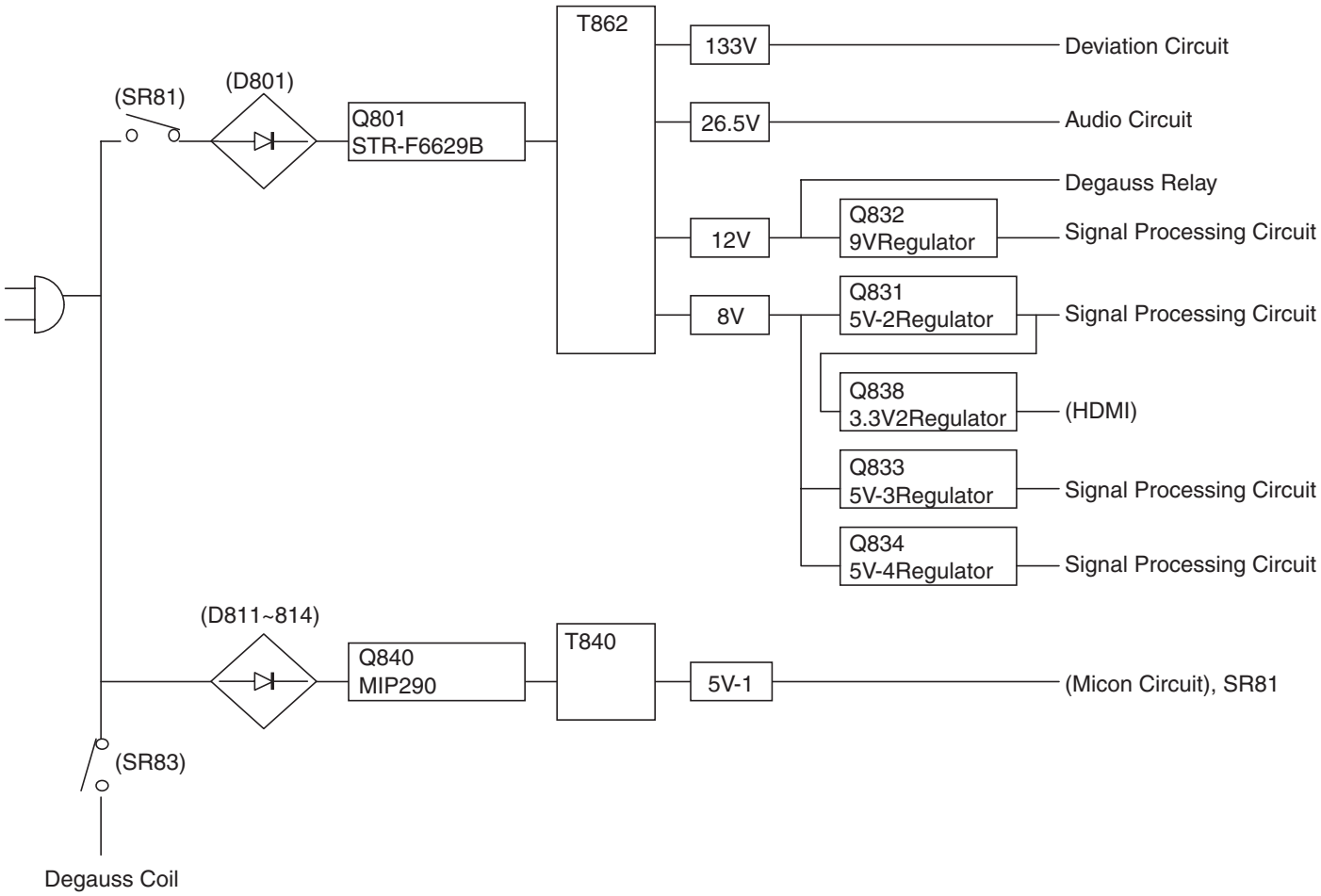

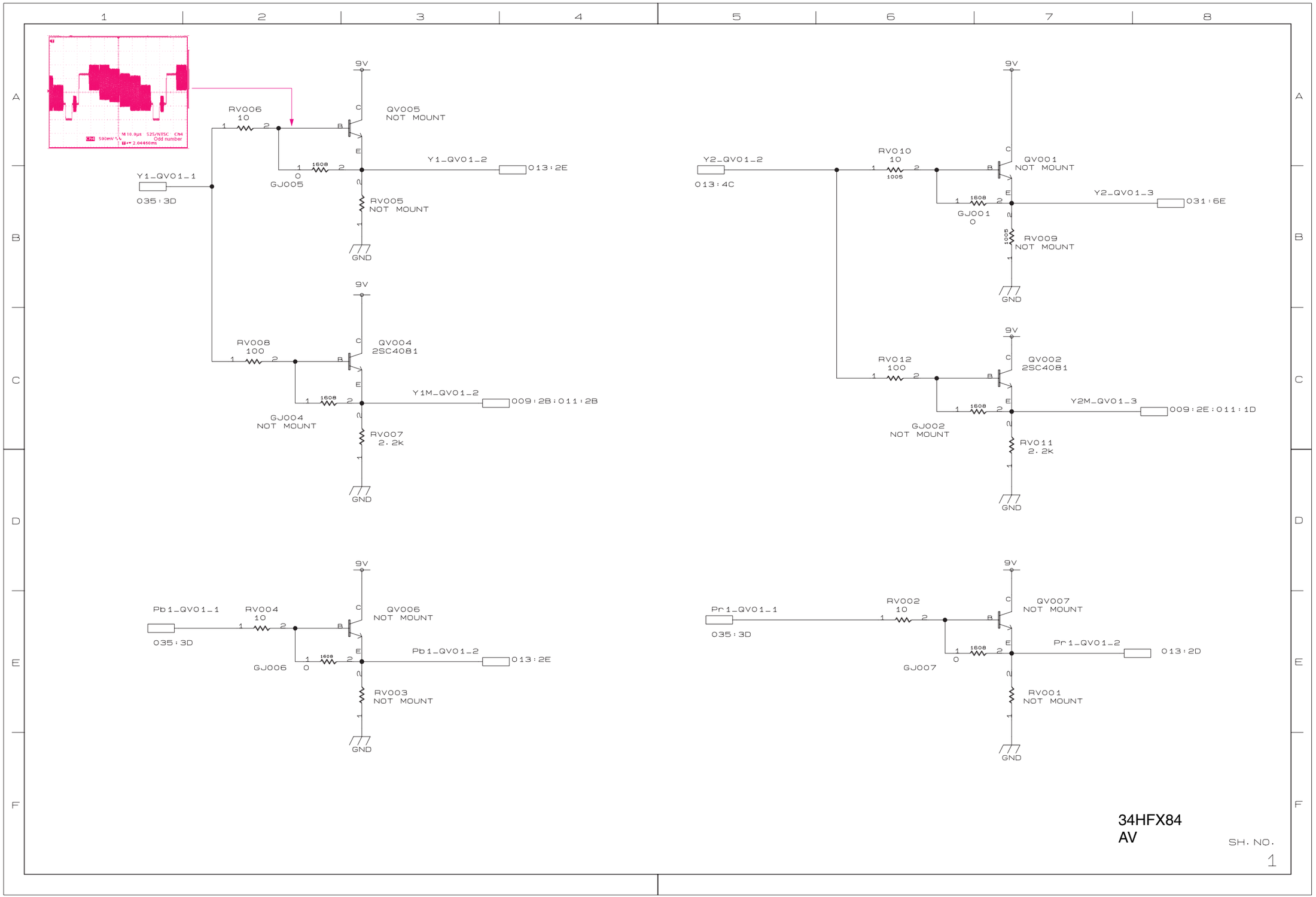
9V
QV005
NOT MOUNT
RV006
10
Y1_QV01_1
035:3D
GJ005
0
1608
Y1_QV01_2
013:2E
RV005
NOT MOUNT
GND
QV004
2SC4081
RV008
100
GJ004
NOT MOUNT
Y1M_QV01_2
009:2B:011:2B
RV007
2.2k
QV001
NOT MOUNT
Y2_QV01_2
013:4C
RV010
10
1005
GJ001
0
Y2_QV01_3
031:6E
RV009
NOT MOUNT
QV002
2SC4081
RV012
100
GJ002
NOT MOUNT
Y2M_QV01_3
009:2E:011:1D
RV011
2.2k
QV006
NOT MOUNT
Pb1_QV01_1
RV004
10
GJ006
Pb1_QV01_2
RV003
NOT MOUNT
QV007
NOT MOUNT
Pr1_QV01_1
RV002
10
GJ007
Pr1_QV01_2
013:2D
RV001
NOT MOUNT
34HFX84
AV
SH. NO.
1

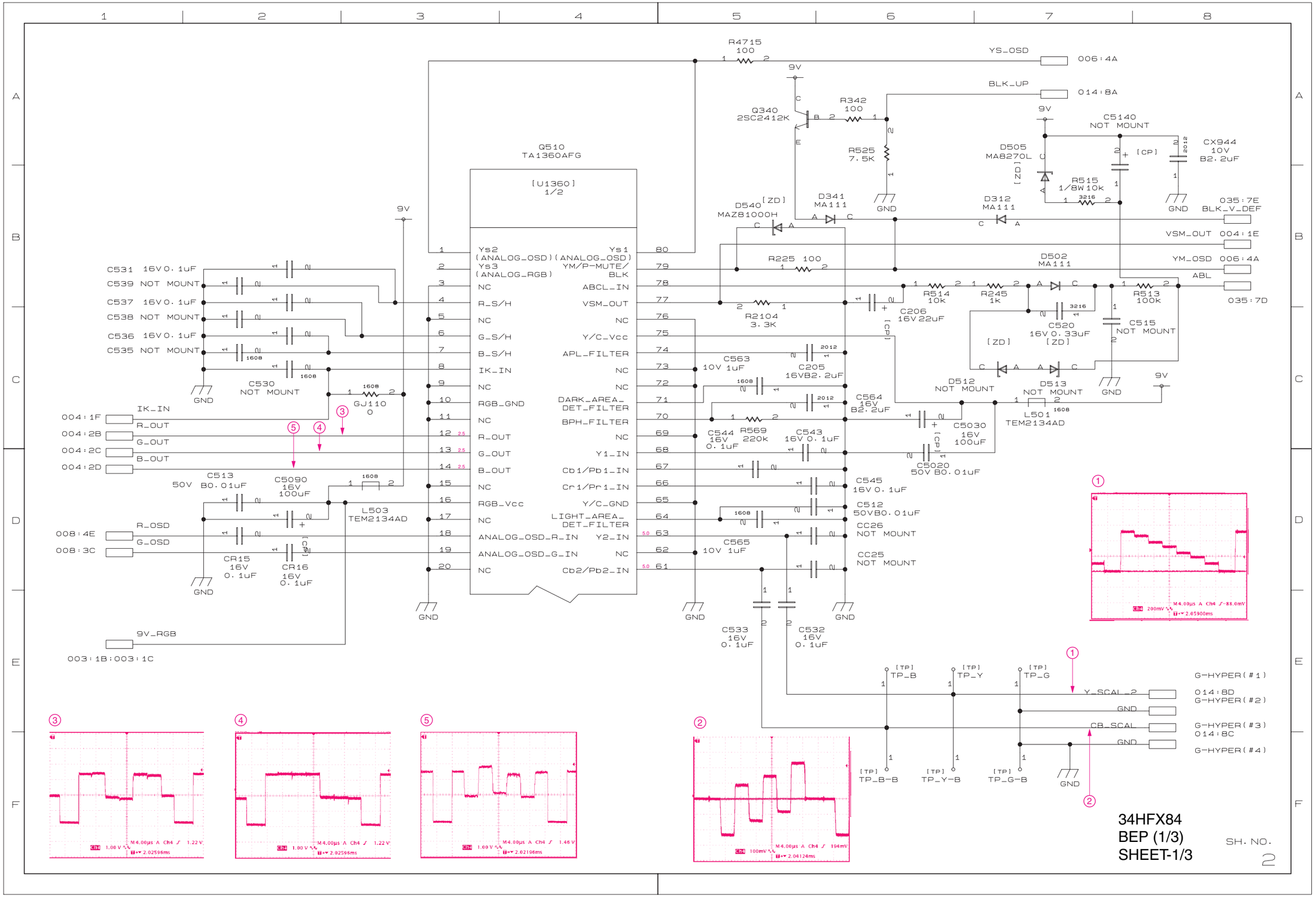

34HFX84
BEP (1/3)
SHEET-1/3

SH. NO. 2

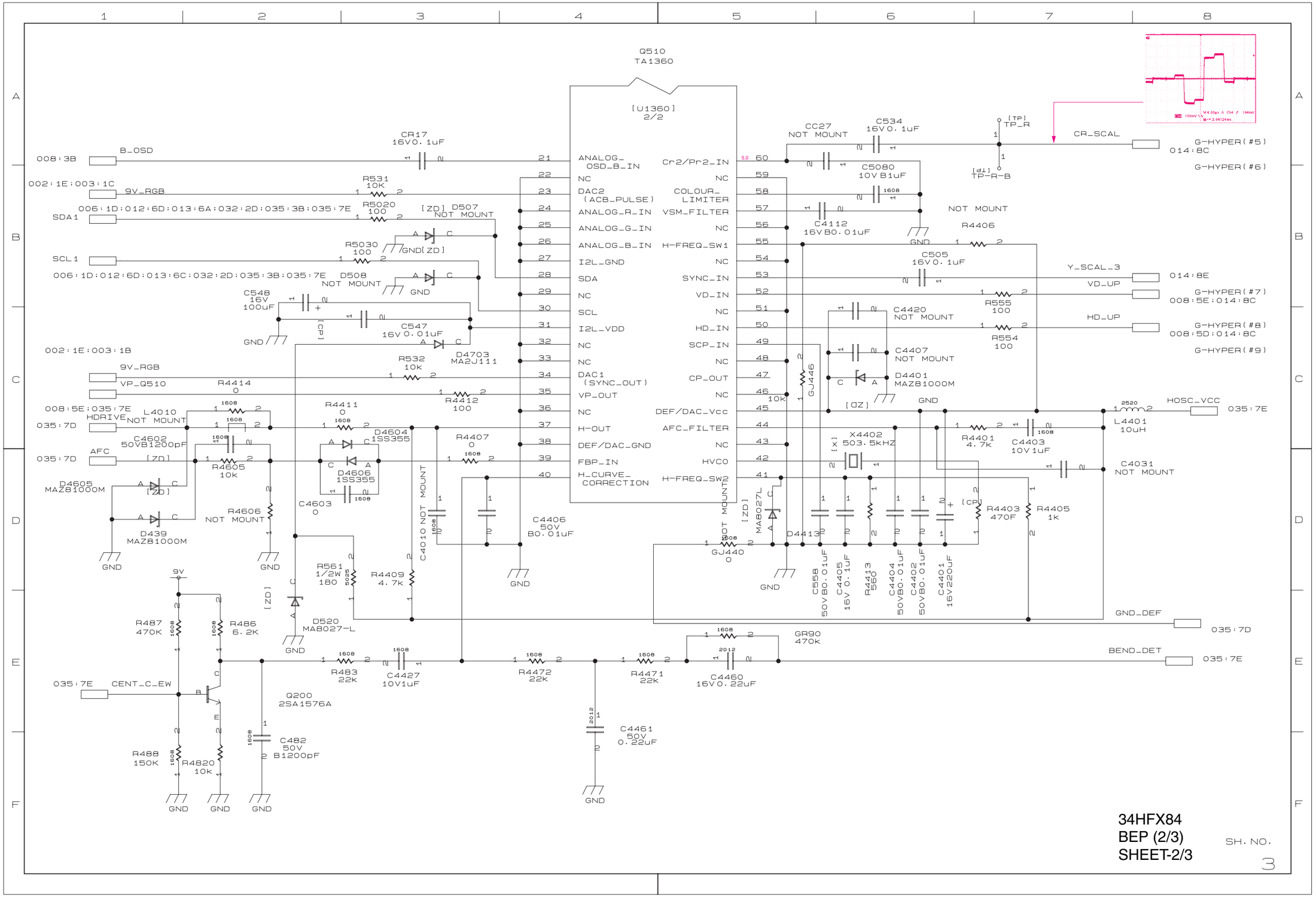
Q510
TA1360
[U1360]
2/2
ANALOG_OSD_B_IN
NC
DAC2 (ACB_PULSE)
ANALOG_R_IN
ANALOG_G_IN
ANALOG_B_IN
I2L_GND
SDA
NC
SCL
I2L_VDD
NC
NC
DAC1 (SYNC_OUT)
VP_OUT
NC
H-OUT
DEF/DAC_GND
FBP_IN
H_CURVE_CORRECTION
Cr2/Pr2_IN
NC
COLOUR_LIMITER
VSM_FILTER
NC
H-FREQ_SW1
NC
SYNC_IN
VD_IN
NC
HD_IN
SCP_IN
NC
CP_OUT
NC
DEF/DAC_Vcc
AFC_FILTER
NC
HVCO
H-FREQ_SW2
B_OSD
9V_RGB
SDA1
SCL1
VP_Q510
HDRIVE
AFC
CENT_C_EW
CR17 16V0.1uF
R531 10K
R5020 100
R5030 100
D507 NOT MOUNT
D508 NOT MOUNT
C548 16V 100uF
C547 16V0.01uF
D4703 MA2J111
R532 10k
R4414 0
R4412 100
R4411 0
L4010 NOT MOUNT
C4602 50VB1200pF
R4605 10k
D4605 MAZ81000M
D439 MAZ81000M
R4606 NOT MOUNT
D4604 1SS355
D4606 1SS355
C4603 0
R4407 0
C4010 NOT MOUNT
C4406 50V B0.01uF
R561 1/2W 180
R4409 4.7k
D520 MA8027-L
R487 470K
R486 6.2K
R488 150K
R4820 10k
Q200 2SA1576A
C482 50V B1200pF
R483 22k
C4427 10V1uF
R4472 22k
R4471 22k
C4461 50V 0.22uF
C4460 16V0.22uF
GR90 470K
CC27 NOT MOUNT
C534 16V0.1uF
C5080 10VB1uF
C4112 16VB0.01uF
R4406 NOT MOUNT
C505 16V0.1uF
C4420 NOT MOUNT
C4407 NOT MOUNT
D4401 MAZ81000M
GJ446 10K
X4402 503.5kHZ
GJ440 0
D4413 MA8027L
C558 50VB0.01uF
C4405 16V0.1uF
R4413 560
C4404 50VB0.01uF
C4402 50VB0.01uF
C4401 16V220uF
R4403 470F
R4405 1k
R4401 4.7k
C4403 10V1uF
L4401 10uH
C4031 NOT MOUNT
R555 100
R554 100
TP_R
TP-R-B
CR_SCAL
Y_SCAL_3
VD_UP
HD_UP
HOSC_VCC
GND_DEF
BEND_DET
G-HYPER(#5)
G-HYPER(#6)
G-HYPER(#7)
G-HYPER(#8)
G-HYPER(#9)
34HFX84
BEP (2/3)
SHEET-2/3
SH. NO.
3

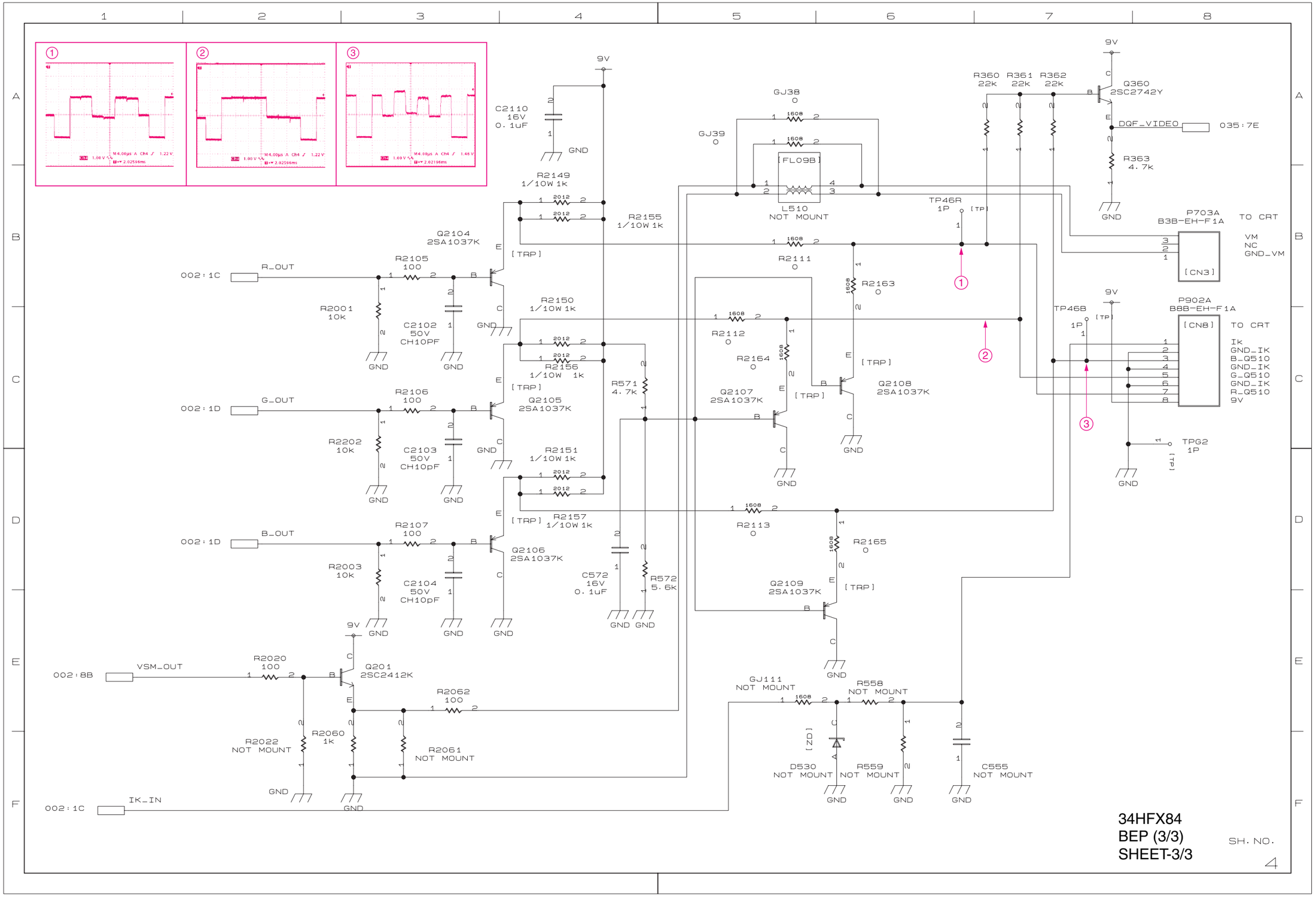
34HFX84
BEP (3/3)
SHEET-3/3
SH. NO.
4
9V
C2110
16V
0.1uF
GND
R2149
1/10W 1k
R2155
1/10W 1k
Q2104
2SA1037K
[TRP]
002:1C
R_OUT
R2105
100
R2001
10k
C2102
50V
CH10PF
R2150
1/10W 1k
R2156
1/10W 1k
002:1D
G_OUT
R2106
100
R2202
10k
C2103
50V
CH10pF
Q2105
2SA1037K
R2151
1/10W 1k
R2157
1/10W 1k
R571
4.7k
002:1D
B_OUT
R2107
100
R2003
10k
C2104
50V
CH10pF
Q2106
2SA1037K
C572
16V
0.1uF
R572
5.6k
002:8B
VSM_OUT
R2020
100
Q201
2SC2412K
R2062
100
R2022
NOT MOUNT
R2060
1k
R2061
NOT MOUNT
002:1C
IK_IN
GJ38
0
GJ39
0
[FL09B]
L510
NOT MOUNT
R2111
0
R2112
0
R2163
0
R2164
0
Q2107
2SA1037K
Q2108
2SA1037K
R2113
0
R2165
0
Q2109
2SA1037K
GJ111
NOT MOUNT
R558
NOT MOUNT
[ZD]
D530
NOT MOUNT
R559
NOT MOUNT
C555
NOT MOUNT
R360
22K
R361
22K
R362
22K
Q360
2SC2742Y
DQF_VIDEO
035:7E
R363
4.7k
TP46R
1P
[TP]
P703A
B3B-EH-F1A
[CN3]
TO CRT
VM
NC
GND_VM
TP46B
1P
P902A
B8B-EH-F1A
[CN8]
TO CRT
Ik
GND_IK
B_Q510
GND_IK
G_Q510
GND_IK
R_Q510
9V
TPG2
1P

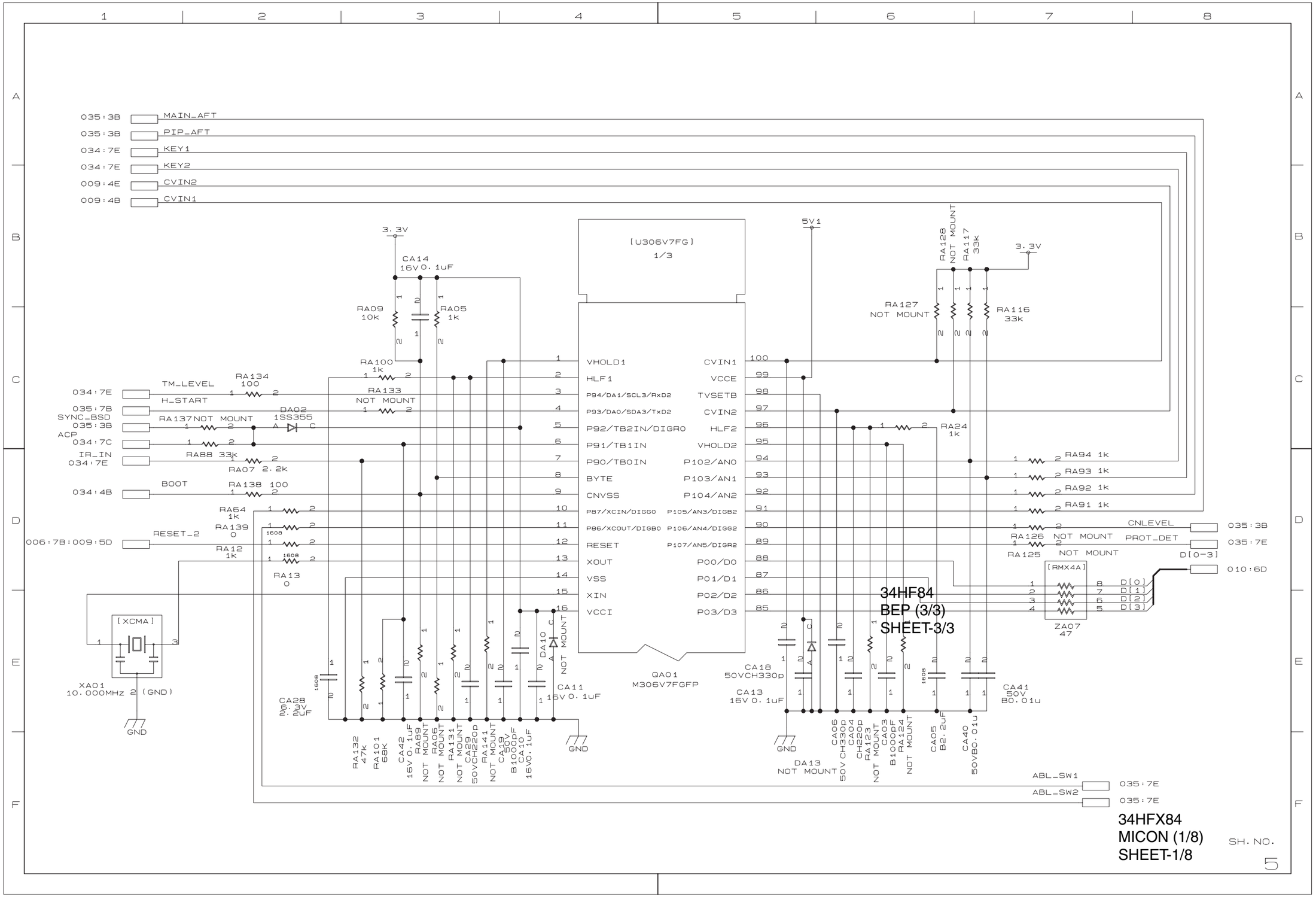
035:3B MAIN_AFT
035:3B PIP_AFT
034:7E KEY1
034:7E KEY2
009:4E CVIN2
009:4B CVIN1
3.3V
CA14 16V 0.1uF
RA09 10k
RA05 1k
RA100 1k
TM_LEVEL
RA134 100
034:7E H_START
035:7B SYNC_BSD
RA133 NOT MOUNT
DA02 1SS355
035:3B ACP
RA137 NOT MOUNT
034:7C IR_IN
RA88 33k
034:7E
RA07 2.2k
BOOT
RA138 100
034:4B
RA64 1k
RA139 0
RESET_2
006:7B:009:5D
RA12 1k
RA13 0
[XCMA]
XA01 10.000MHz
(GND)
GND
CA28 0.3V 2uF
RA132 47k
RA101 68k
CA42 16V 0.1uF
RA89 NOT MOUNT
RA06 NOT MOUNT
RA131 NOT MOUNT
CA29 50VCH220p
RA141 NOT MOUNT
CA19 50V B1000pF
CA10 16V0.1uF
DA10 NOT MOUNT
CA11 16V 0.1uF
[U306V7FG]
1/3
VHOLD1
HLF1
P94/DA1/SCL3/RxD2
P93/DA0/SDA3/TxD2
P92/TB2IN/DIGR0
P91/TB1IN
P90/TB0IN
BYTE
CNVSS
P87/XCIN/DIGG0
P86/XCOUT/DIGB0
RESET
XOUT
VSS
XIN
VCCI
CVIN1
VCCE
TVSETB
CVIN2
HLF2
VHOLD2
P102/AN0
P103/AN1
P104/AN2
P105/AN3/DIGB2
P106/AN4/DIGG2
P107/AN5/DIGR2
P00/D0
P01/D1
P02/D2
P03/D3
QA01 M306V7FGFP
5V1
RA128 NOT MOUNT
RA117 33k
3.3V
RA127 NOT MOUNT
RA116 33k
RA24 1k
RA94 1k
RA93 1k
RA92 1k
RA91 1k
CNLEVEL
035:3B
RA126 NOT MOUNT
PROT_DET
035:7E
RA125 NOT MOUNT
D[0-3]
010:6D
[RMX4A]
ZA07 47
D[0]
D[1]
D[2]
D[3]
CA18 50VCH330p
CA13 16V 0.1uF
DA13 NOT MOUNT
CA06 50V CH330p
CA04 CH220p
RA123 NOT MOUNT
CA03 B1000pF
RA124 NOT MOUNT
CA05 B2.2uF
CA40 50VB0.01u
CA41 50V B0.01u
ABL_SW1
035:7E
ABL_SW2
035:7E
34HF84
BEP (3/3)
SHEET-3/3
34HFX84
MICON (1/8)
SHEET-1/8
SH. NO.
5

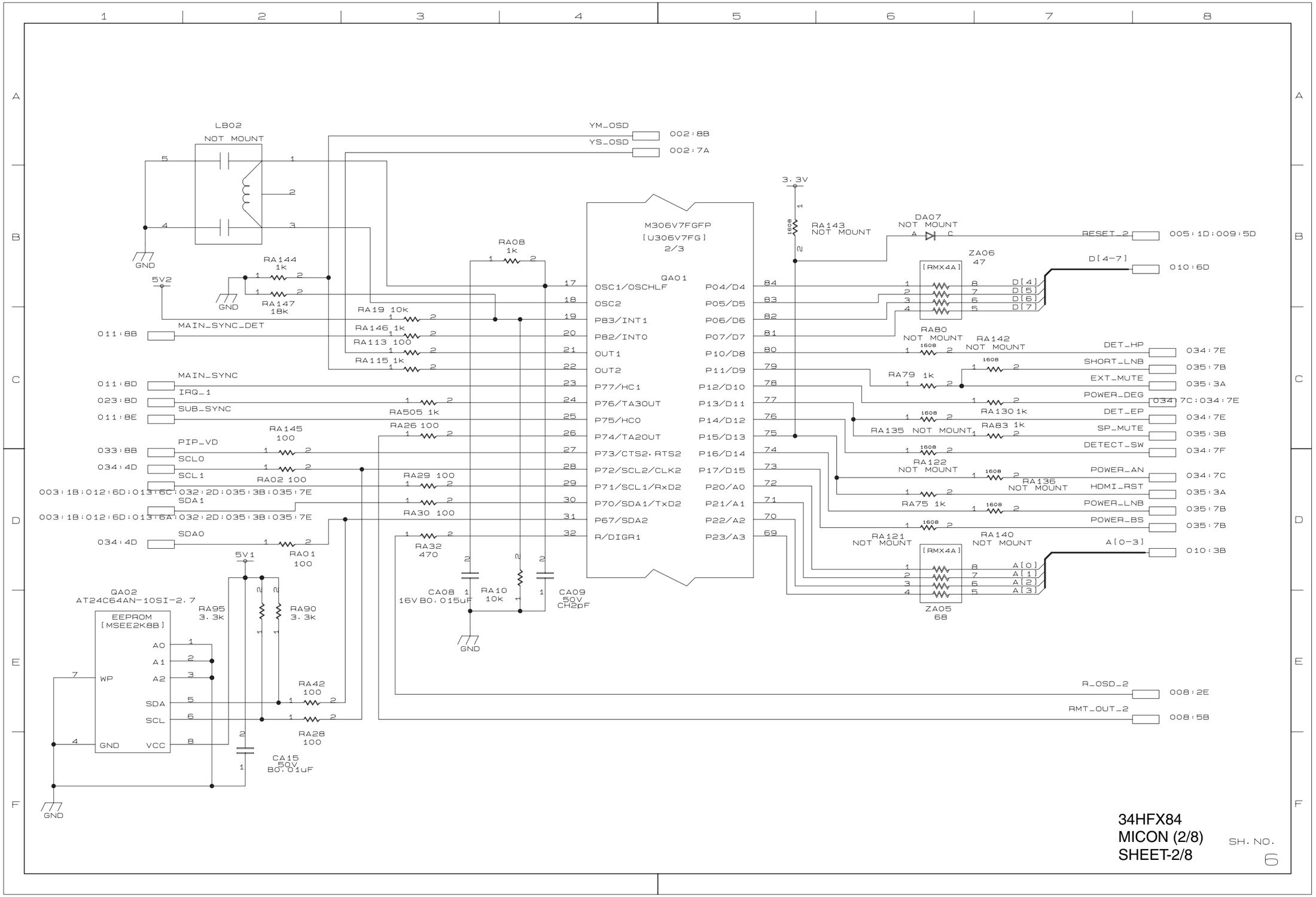
LB02
NOT MOUNT
GND
5V2
RA144 1k
RA147 18k
011:8B
MAIN_SYNC_DET
011:8D
MAIN_SYNC
023:8D
IRQ_1
011:8E
SUB_SYNC
033:8B
PIP_VD
034:4D
SCL0
SCL1
003:1B:012:6D:013:6C:032:2D:035:3B:035:7E
SDA1
003:1B:012:6D:013:6A:032:2D:035:3B:035:7E
SDA0
RA145 100
RA02 100
RA01 100
5V1
QA02
AT24C64AN-10SI-2.7
EEPROM
[MSEE2K8B]
A0
A1
A2
WP
SDA
SCL
GND
VCC
RA95 3.3k
RA90 3.3k
RA42 100
RA28 100
CA15 50V B0.01uF
YM_OSD
002:8B
YS_OSD
002:7A
RA08 1k
RA19 10k
RA146 1k
RA113 100
RA115 1k
RA505 1k
RA26 100
RA29 100
RA30 100
RA32 470
CA08 16V B0.015uF
RA10 10k
CA09 50V CH2pF
M306V7FGFP
[U306V7FG]
2/3
QA01
OSC1/OSCHLF
OSC2
P83/INT1
P82/INT0
OUT1
OUT2
P77/HC1
P76/TA3OUT
P75/HC0
P74/TA2OUT
P73/CTS2, RTS2
P72/SCL2/CLK2
P71/SCL1/RxD2
P70/SDA1/TxD2
P67/SDA2
R/DIGR1
P04/D4
P05/D5
P06/D6
P07/D7
P10/D8
P11/D9
P12/D10
P13/D11
P14/D12
P15/D13
P16/D14
P17/D15
P20/A0
P21/A1
P22/A2
P23/A3
3.3V
RA143 NOT MOUNT
DA07 NOT MOUNT
RESET_2
005:1D:009:5D
ZA06 47
[RMX4A]
D[4-7]
010:6D
D[4]
D[5]
D[6]
D[7]
RA80 NOT MOUNT
RA142 NOT MOUNT
DET_HP
034:7E
SHORT_LNB
035:7B
RA79 1k
EXT_MUTE
035:3A
POWER_DEG
034:7C:034:7E
RA130 1k
DET_EP
034:7E
RA135 NOT MOUNT
RA83 1k
SP_MUTE
035:3B
DETECT_SW
034:7F
RA122 NOT MOUNT
POWER_AN
034:7C
RA136 NOT MOUNT
HDMI_RST
035:3A
RA75 1k
POWER_LNB
035:7B
POWER_BS
035:7B
RA121 NOT MOUNT
RA140 NOT MOUNT
A[0-3]
010:3B
A[0]
A[1]
A[2]
A[3]
ZA05 68
R_OSD_2
008:2E
RMT_OUT_2
008:5B
34HFX84
MICON (2/8)
SHEET-2/8
SH. NO.
6

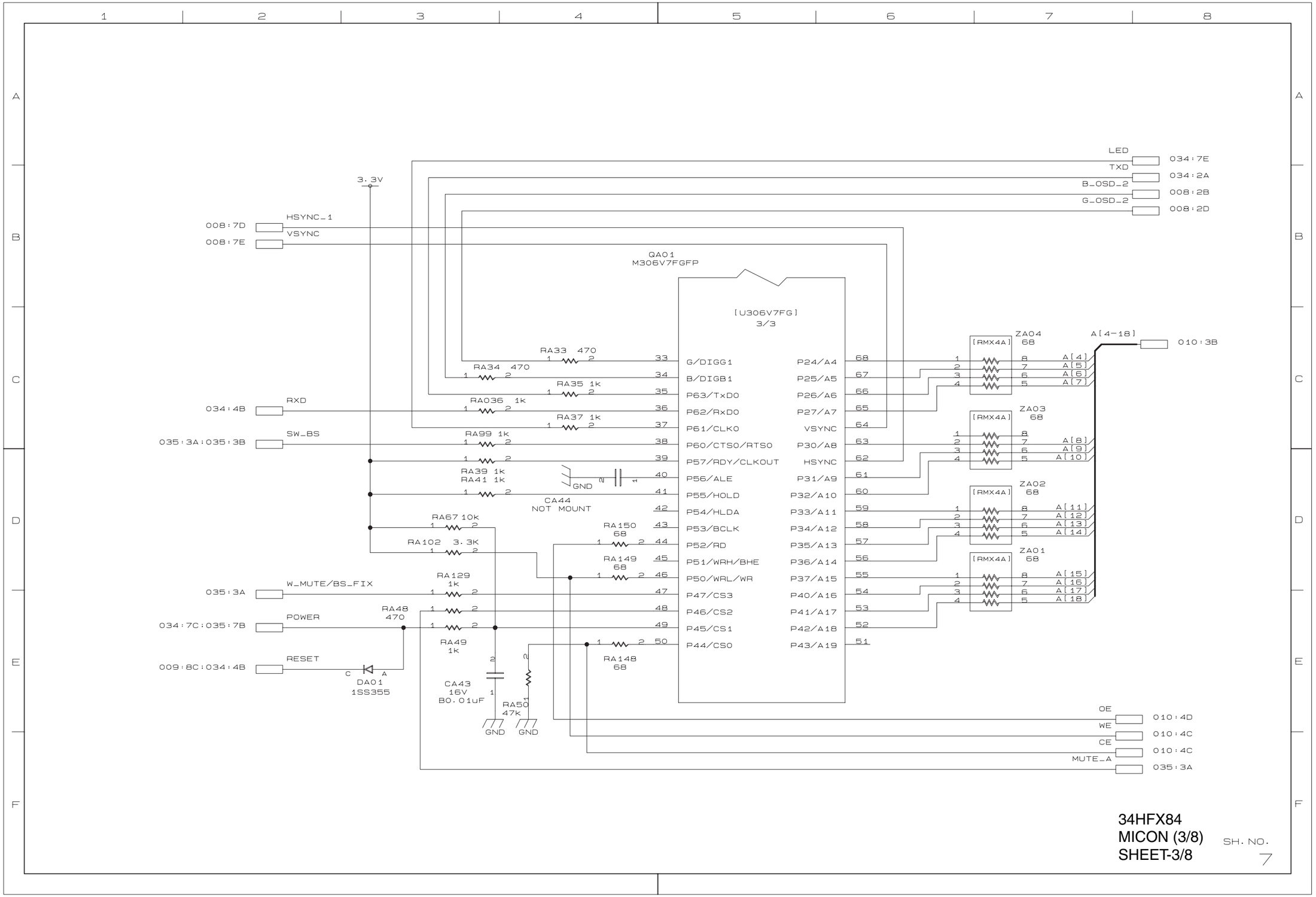
LED
TXD
B_OSD_2
G_OSD_2
034:7E
034:2A
008:2B
008:2D
3.3V
008:7D
HSYNC_1
008:7E
VSYNC
QA01
M306V7FGFP
[U306V7FG]
3/3
RA33 470
RA34 470
RA35 1k
RA036 1k
RA37 1k
RA99 1k
RA39 1k
RA41 1k
GND
CA44
NOT MOUNT
RA67 10k
RA102 3.3K
RA150
68
RA149
68
RA129
1k
RA48
470
RA49
1k
RA148
68
CA43
16V
B0.01uF
RA50
47k
GND
GND
034:4B
RXD
035:3A:035:3B
SW_BS
035:3A
W_MUTE/BS_FIX
034:7C:035:7B
POWER
009:8C:034:4B
RESET
DA01
1SS355
G/DIGG1
B/DIGB1
P63/TxD0
P62/RxD0
P61/CLK0
P60/CTS0/RTS0
P57/RDY/CLKOUT
P56/ALE
P55/HOLD
P54/HLDA
P53/BCLK
P52/RD
P51/WRH/BHE
P50/WRL/WR
P47/CS3
P46/CS2
P45/CS1
P44/CS0
P24/A4
P25/A5
P26/A6
P27/A7
VSYNC
P30/A8
HSYNC
P31/A9
P32/A10
P33/A11
P34/A12
P35/A13
P36/A14
P37/A15
P40/A16
P41/A17
P42/A18
P43/A19
ZA04
68
ZA03
68
ZA02
68
ZA01
68
[RMX4A]
A[4-18]
010:3B
A[4]
A[5]
A[6]
A[7]
A[8]
A[9]
A[10]
A[11]
A[12]
A[13]
A[14]
A[15]
A[16]
A[17]
A[18]
OE
WE
CE
MUTE_A
010:4D
010:4C
010:4C
035:3A
34HFX84
MICON (3/8)
SHEET-3/8
SH. NO.
7

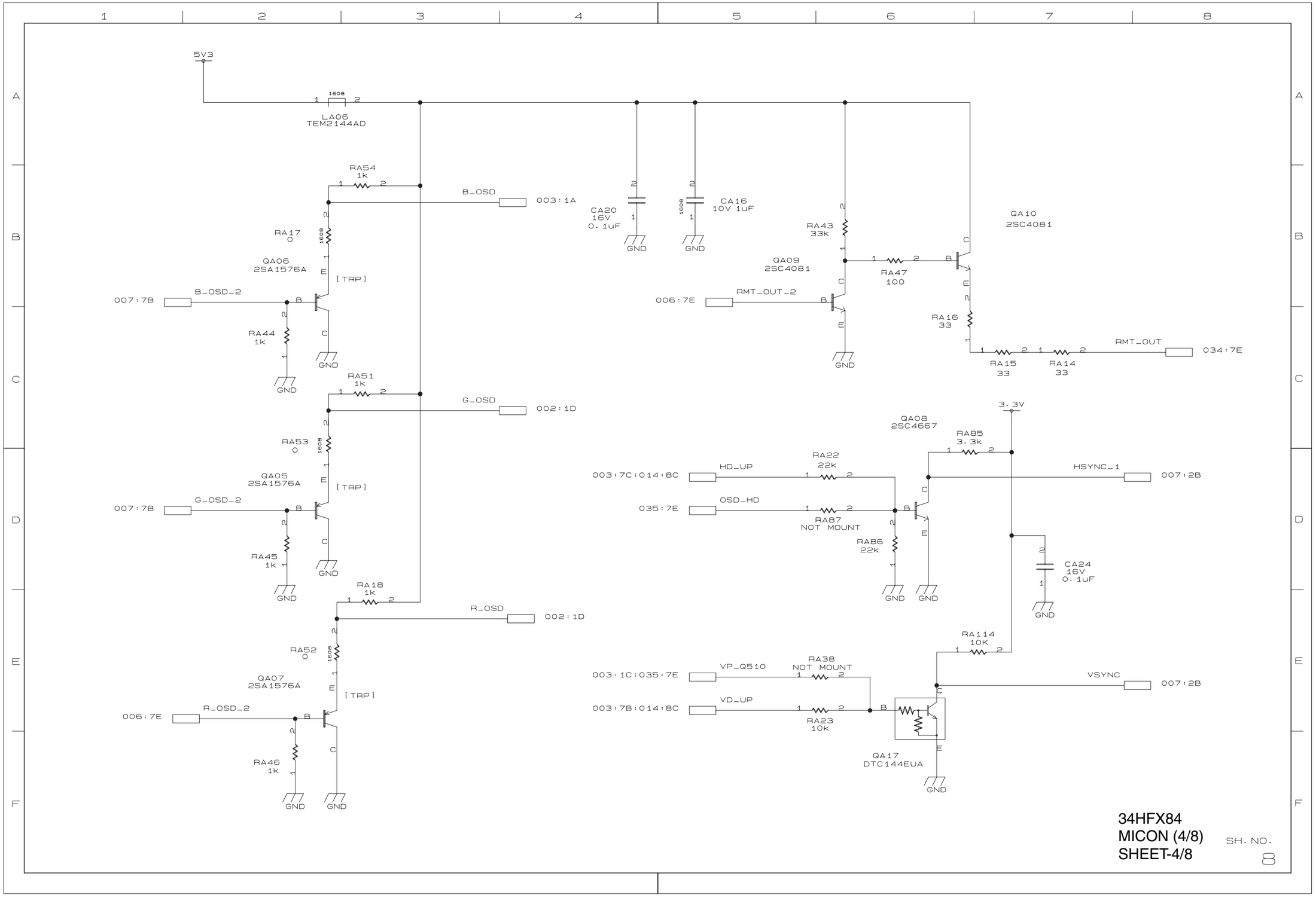
5V3
LA06
TEM2144AD
RA54
1k
B_OSD
003:1A
CA20
16V
0.1uF
CA16
10V 1uF
GND
RA17
0
QA06
2SA1576A
[TRP]
007:7B
B_OSD_2
RA44
1k
RA51
1k
G_OSD
002:1D
RA53
0
QA05
2SA1576A
G_OSD_2
RA45
1k
RA18
1k
R_OSD
RA52
0
QA07
2SA1576A
R_OSD_2
RA46
1k
RA43
33k
QA09
2SC4081
006:7E
RMT_OUT_2
RA47
100
QA10
2SC4081
RA16
33
RA15
33
RA14
33
RMT_OUT
034:7E
3.3V
QA08
2SC4667
RA85
3.3k
RA22
22k
003:7C:014:8C
HD_UP
HSYNC_1
007:2B
035:7E
OSD_HD
RA87
NOT MOUNT
RA86
22k
CA24
16V
0.1uF
RA114
10K
RA38
NOT MOUNT
003:1C:035:7E
VP_Q510
VSYNC
003:7B:014:8C
VD_UP
RA23
10K
QA17
DTC144EUA
34HFX84
MICON (4/8)
SHEET-4/8
SH. NO.
8

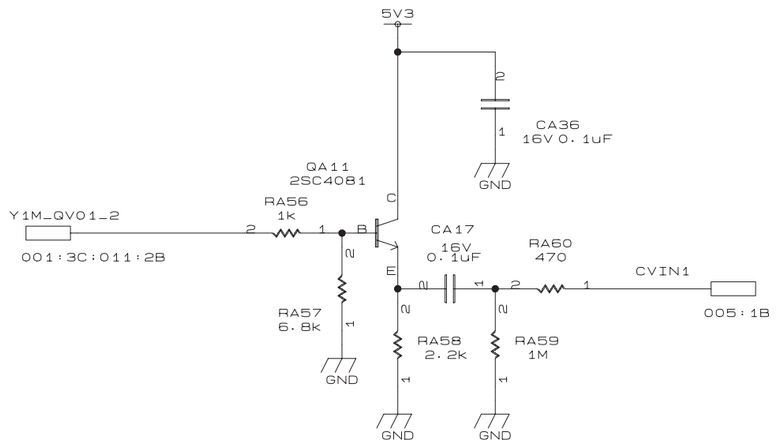

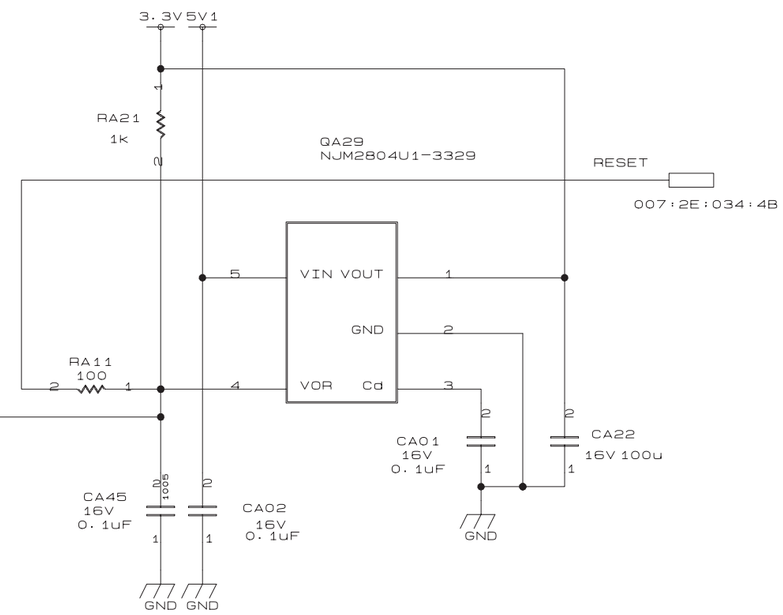

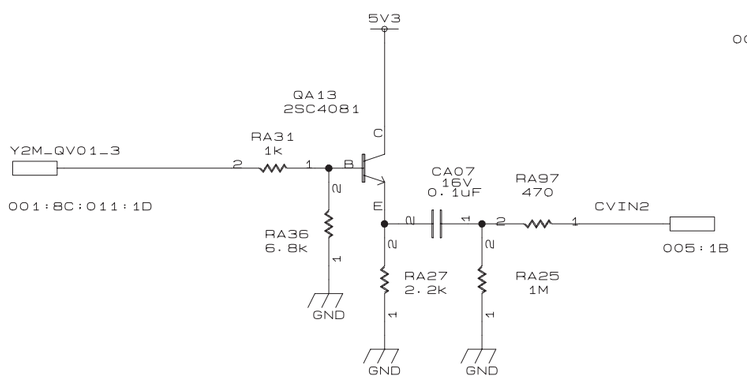

34HFX84
MICON (5/8)
SHEET-5/8

SH. NO.
9

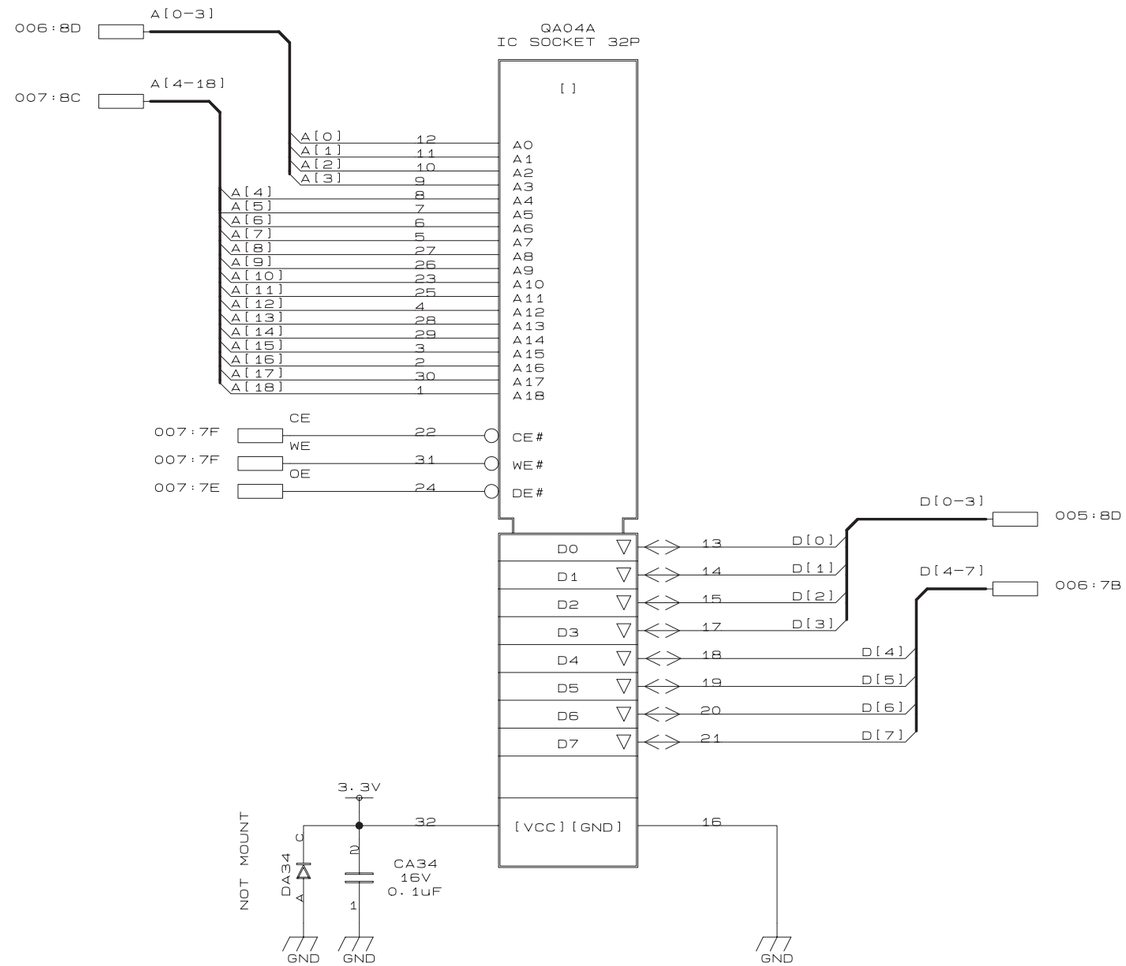

34HFX84
MICON (6/8)
SHEET-6/8

SH. NO.
10

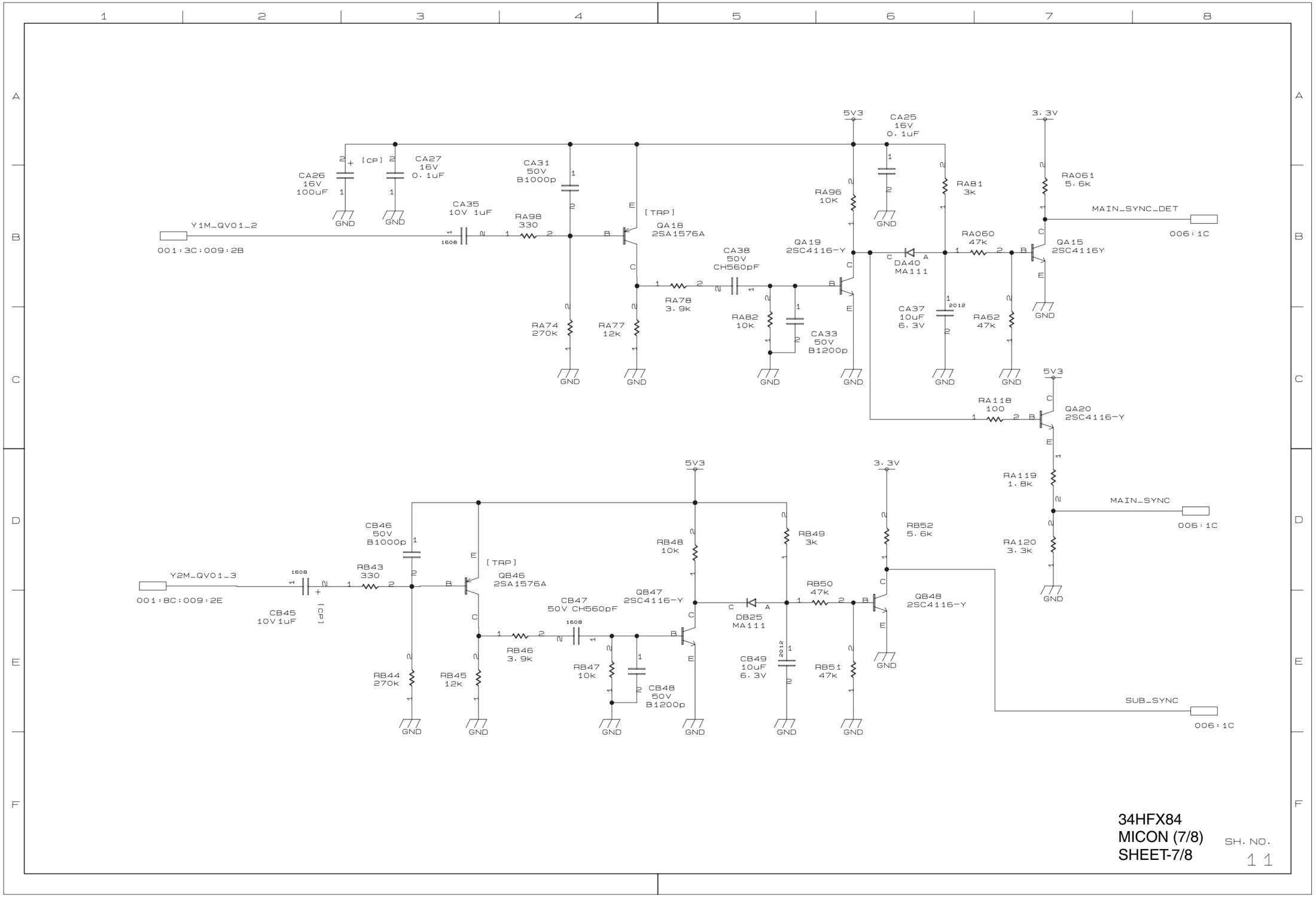

34HFX84
MICON (7/8)
SHEET-7/8

SH. NO.
11

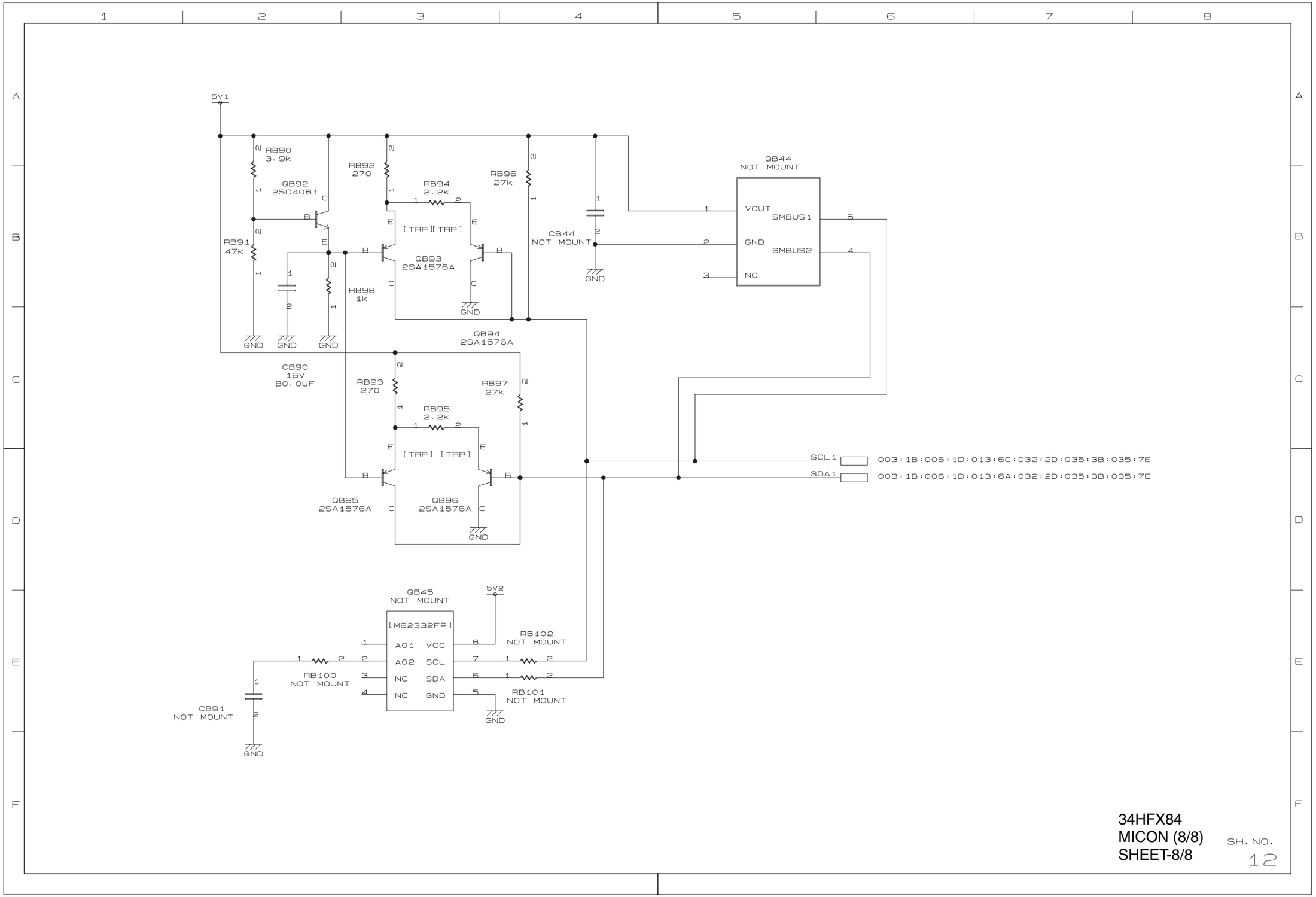
5V1
RB90
3.9k
QB92
2SC4081
RB91
47k
RB92
270
RB94
2.2k
[TRP][TRP]
QB93
2SA1576A
RB98
1k
RB96
27k
CB44
NOT MOUNT
QB44
NOT MOUNT
VOUT
SMBUS1
GND
SMBUS2
NC
GND
QB94
2SA1576A
CB90
16V
80.0uF
RB93
270
RB95
2.2k
[TRP] [TRP]
RB97
27k
QB95
2SA1576A
QB96
2SA1576A
SCL1
SDA1
003:1B:006:1D:013:6C:032:2D:035:3B:035:7E
003:1B:006:1D:013:6A:032:2D:035:3B:035:7E
QB45
NOT MOUNT
5V2
[M62332FP]
A01
A02
NC
NC
VCC
SCL
SDA
GND
RB102
NOT MOUNT
RB100
NOT MOUNT
RB101
NOT MOUNT
CB91
NOT MOUNT
34HFX84
MICON (8/8)
SHEET-8/8
SH. NO.
12

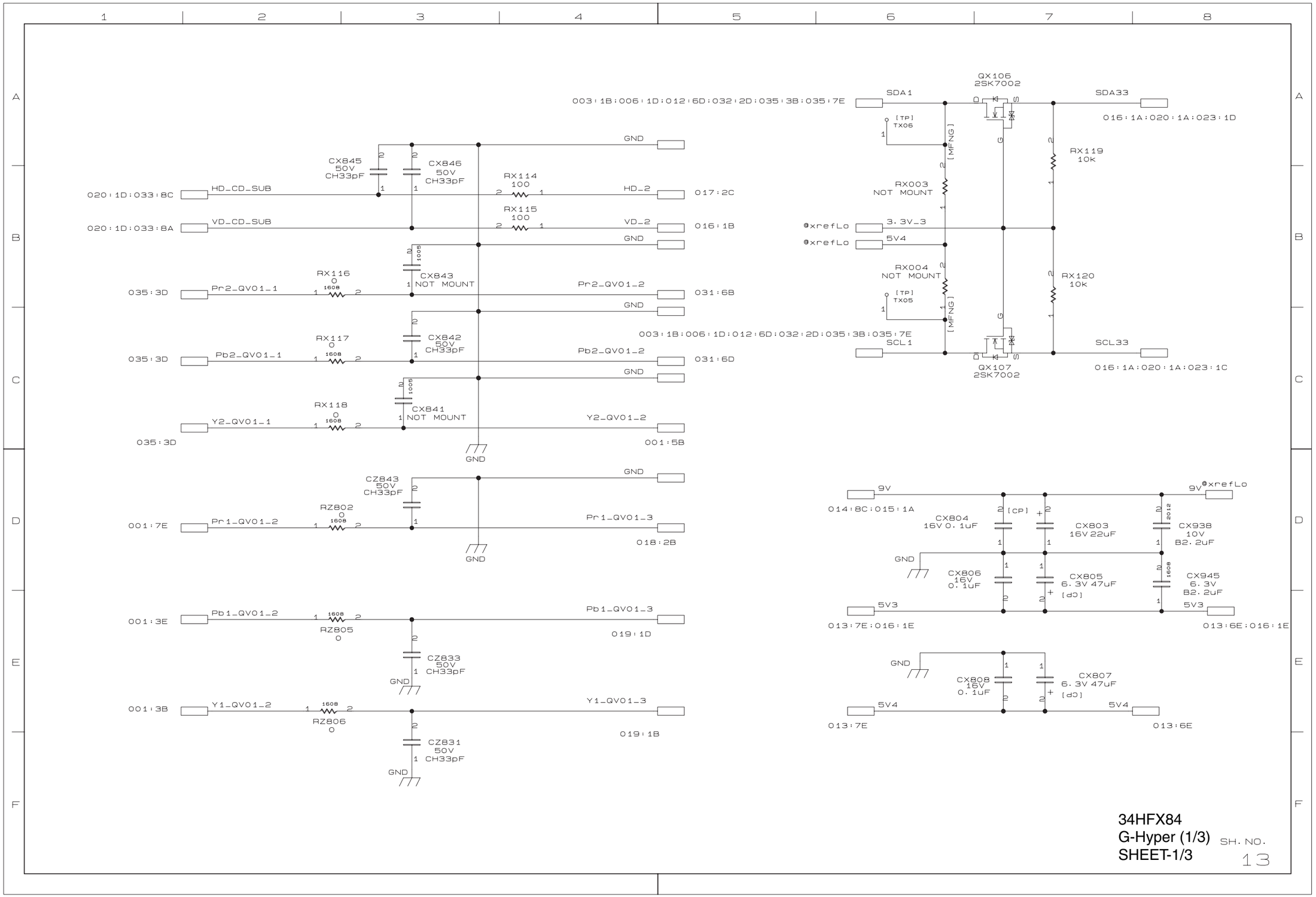

34HFX84
G-Hyper (1/3)
SHEET-1/3

SH. NO. 13

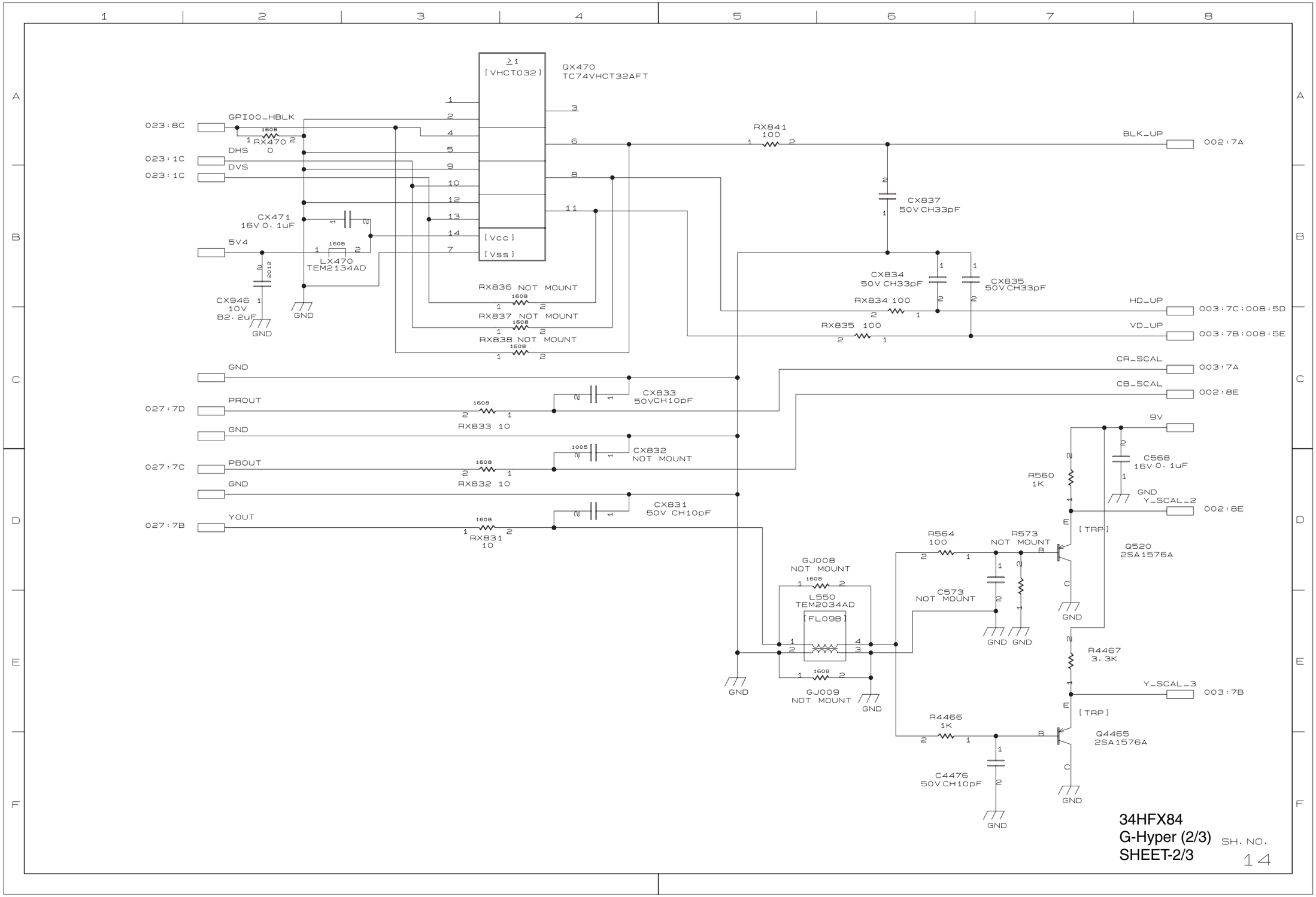
QX470
TC74VHCT32AFT
[VHCT032]
[Vcc]
[Vss]
023:8C
GPIO0_HBLK
RX470 0
023:1C
DHS
DVS
CX471
16V 0.1uF
5V4
LX470
TEM2134AD
CX946
10V
B2.2uF
GND
RX836 NOT MOUNT
RX837 NOT MOUNT
RX838 NOT MOUNT
RX841
100
BLK_UP
002:7A
CX837
50V CH33pF
CX834
50V CH33pF
CX835
50V CH33pF
RX834 100
HD_UP
003:7C:008:5D
RX835 100
VD_UP
003:7B:008:5E
CR_SCAL
003:7A
CB_SCAL
002:8E
027:7D
PROUT
RX833 10
CX833
50VCH10pF
027:7C
PBOUT
RX832 10
CX832
NOT MOUNT
027:7B
YOUT
RX831
10
CX831
50V CH10pF
9V
C568
16V 0.1uF
R560
1K
Y_SCAL_2
002:8E
[TRP]
Q520
2SA1576A
R564
100
R573
NOT MOUNT
GJ008
NOT MOUNT
L550
TEM2034AD
[FL09B]
C573
NOT MOUNT
GJ009
NOT MOUNT
R4467
3.3K
Y_SCAL_3
003:7B
R4466
1K
Q4465
2SA1576A
C4476
50V CH10pF
34HFX84
G-Hyper (2/3)
SHEET-2/3
SH. NO.
14

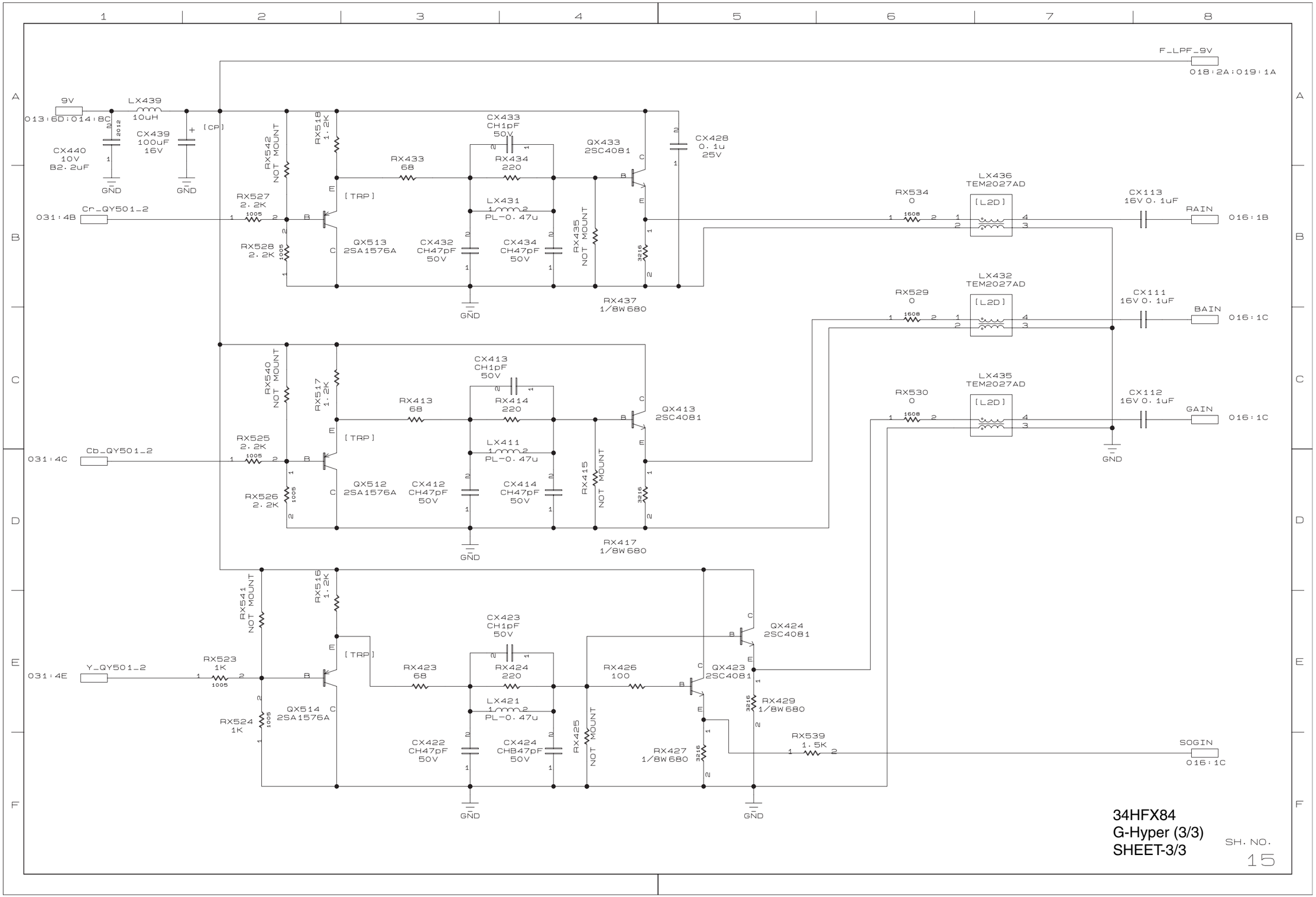
F_LPF_9V
018:2A:019:1A
9V
013:6D:014:8C
LX439
10uH
CX440
10V
B2.2uF
CX439
100uF
16V
GND
[CP]
RX542
NOT MOUNT
RX518
1.2K
CX433
CH1pF
50V
QX433
2SC4081
CX428
0.1u
25V
RX433
68
RX434
220
[TRP]
LX431
PL-0.47u
RX527
2.2K
031:4B
Cr_QY501_2
RX528
2.2K
QX513
2SA1576A
CX432
CH47pF
50V
CX434
CH47pF
50V
RX435
NOT MOUNT
RX437
1/8W680
RX534
0
LX436
TEM2027AD
[L2D]
CX113
16V 0.1uF
RAIN
016:1B
RX529
0
LX432
TEM2027AD
CX111
16V 0.1uF
BAIN
016:1C
RX530
0
LX435
TEM2027AD
CX112
16V 0.1uF
GAIN
016:1C
RX540
NOT MOUNT
RX517
1.2K
CX413
CH1pF
50V
QX413
2SC4081
RX413
68
RX414
220
[TRP]
LX411
PL-0.47u
RX525
2.2K
031:4C
Cb_QY501_2
RX526
2.2K
QX512
2SA1576A
CX412
CH47pF
50V
CX414
CH47pF
50V
RX415
NOT MOUNT
RX417
1/8W680
RX541
NOT MOUNT
RX516
1.2K
CX423
CH1pF
50V
QX424
2SC4081
[TRP]
RX523
1K
031:4E
Y_QY501_2
RX423
68
RX424
220
RX426
100
QX423
2SC4081
LX421
PL-0.47u
RX429
1/8W680
QX514
2SA1576A
RX524
1K
CX422
CH47pF
50V
CX424
CHB47pF
50V
RX425
NOT MOUNT
RX427
1/8W680
RX539
1.5K
SOGIN
016:1C
34HFX84
G-Hyper (3/3)
SHEET-3/3
SH. NO.
15

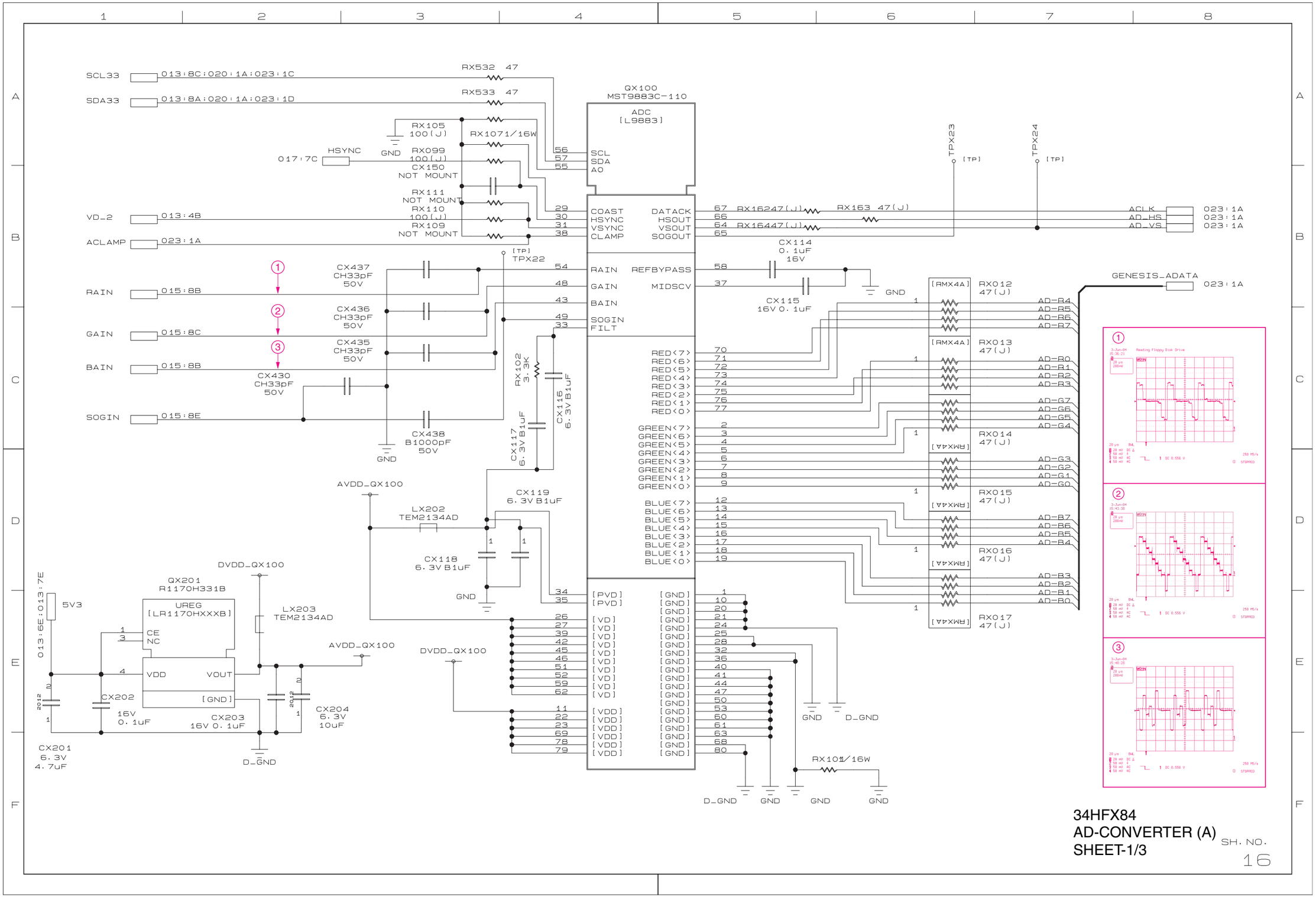

34HFX84
AD-CONVERTER (A)
SHEET-1/3

SH. NO.
16

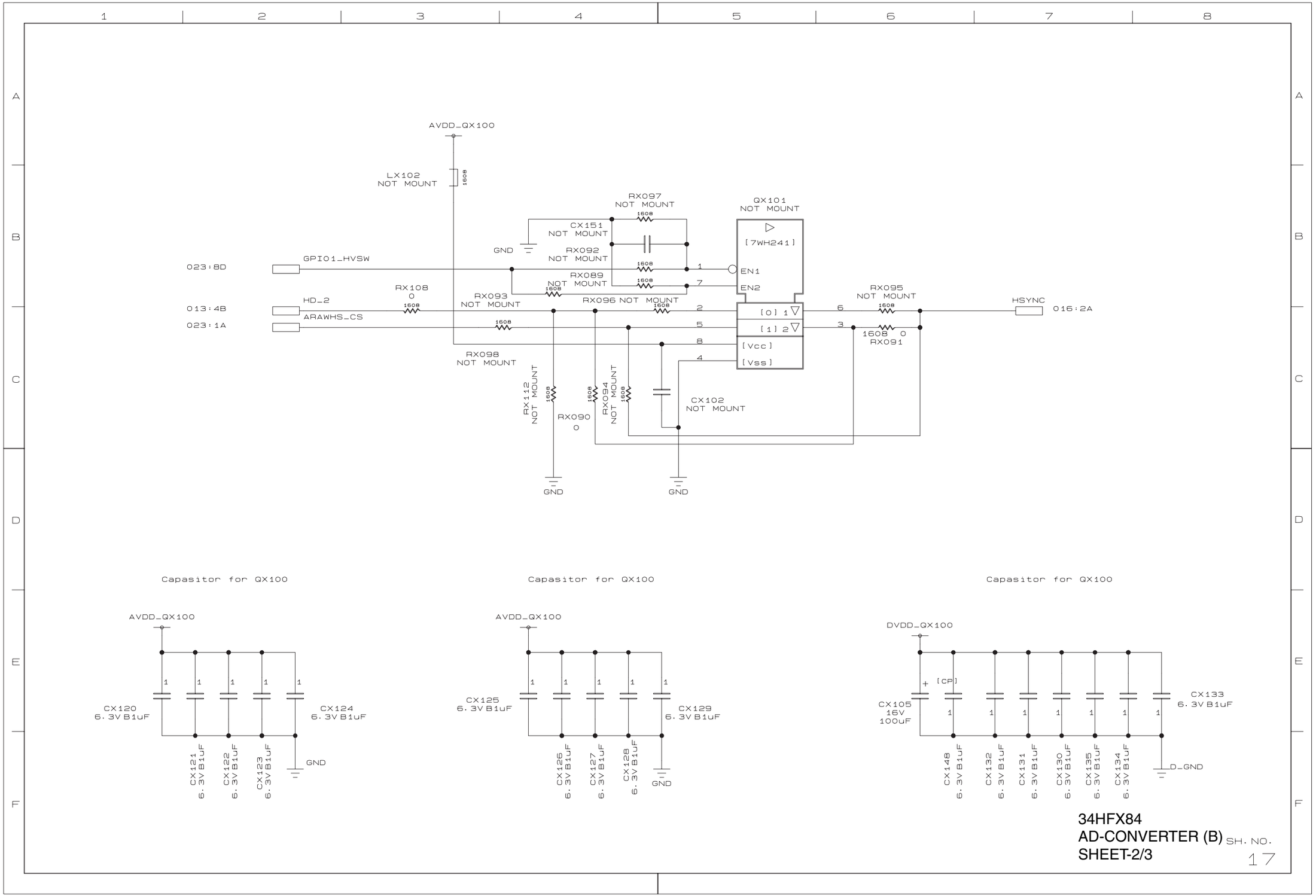
AVDD_QX100
LX102
NOT MOUNT
1608
RX097
NOT MOUNT
QX101
NOT MOUNT
CX151
NOT MOUNT
[7WH241]
GND
RX092
NOT MOUNT
023:8D
GPIO1_HVSW
EN1
RX089
NOT MOUNT
EN2
RX108
0
RX093
NOT MOUNT
RX096 NOT MOUNT
RX095
NOT MOUNT
HSYNC
016:2A
013:4B
HD_2
023:1A
ARAWHS_CS
[0] 1
[1] 2
[Vcc]
[Vss]
1609 0
RX091
RX098
NOT MOUNT
RX112
NOT MOUNT
RX090
0
RX094
NOT MOUNT
CX102
NOT MOUNT
Capasitor for QX100
Capasitor for QX100
Capasitor for QX100
CX120
6.3V B1uF
CX124
6.3V B1uF
CX121
6.3V B1uF
CX122
6.3V B1uF
CX123
6.3V B1uF
CX125
6.3V B1uF
CX129
6.3V B1uF
CX126
6.3V B1uF
CX127
6.3V B1uF
CX128
6.3V B1uF
DVDD_QX100
[CP]
CX105
16V
100uF
CX133
6.3V B1uF
CX148
6.3V B1uF
CX132
6.3V B1uF
CX131
6.3V B1uF
CX130
6.3V B1uF
CX135
6.3V B1uF
CX134
6.3V B1uF
D_GND
34HFX84
AD-CONVERTER (B)
SHEET-2/3
SH. NO.
17

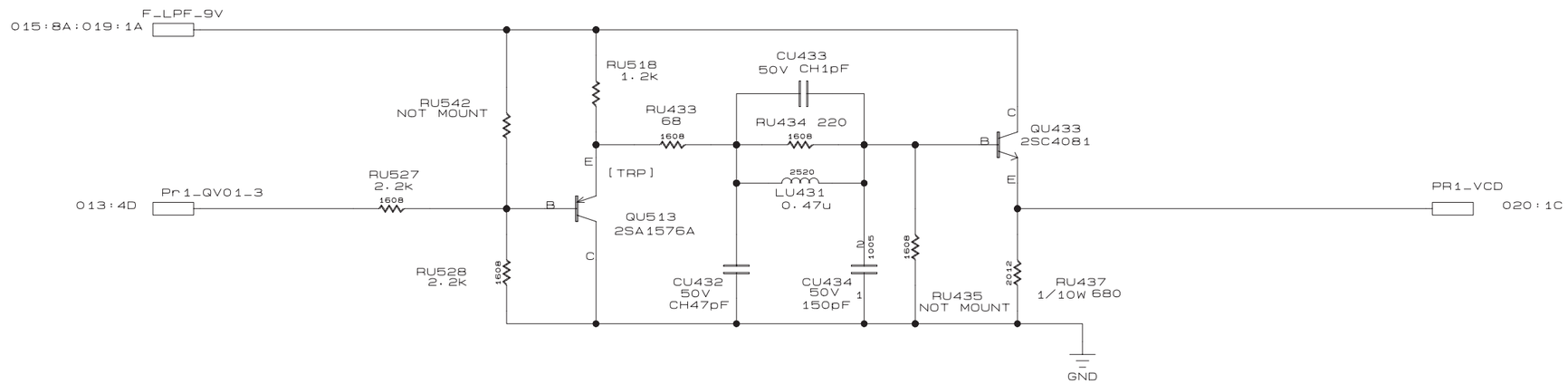

34HFX84
AD-CONVERTER (C)
SHEET-3/3

SH. NO.
18

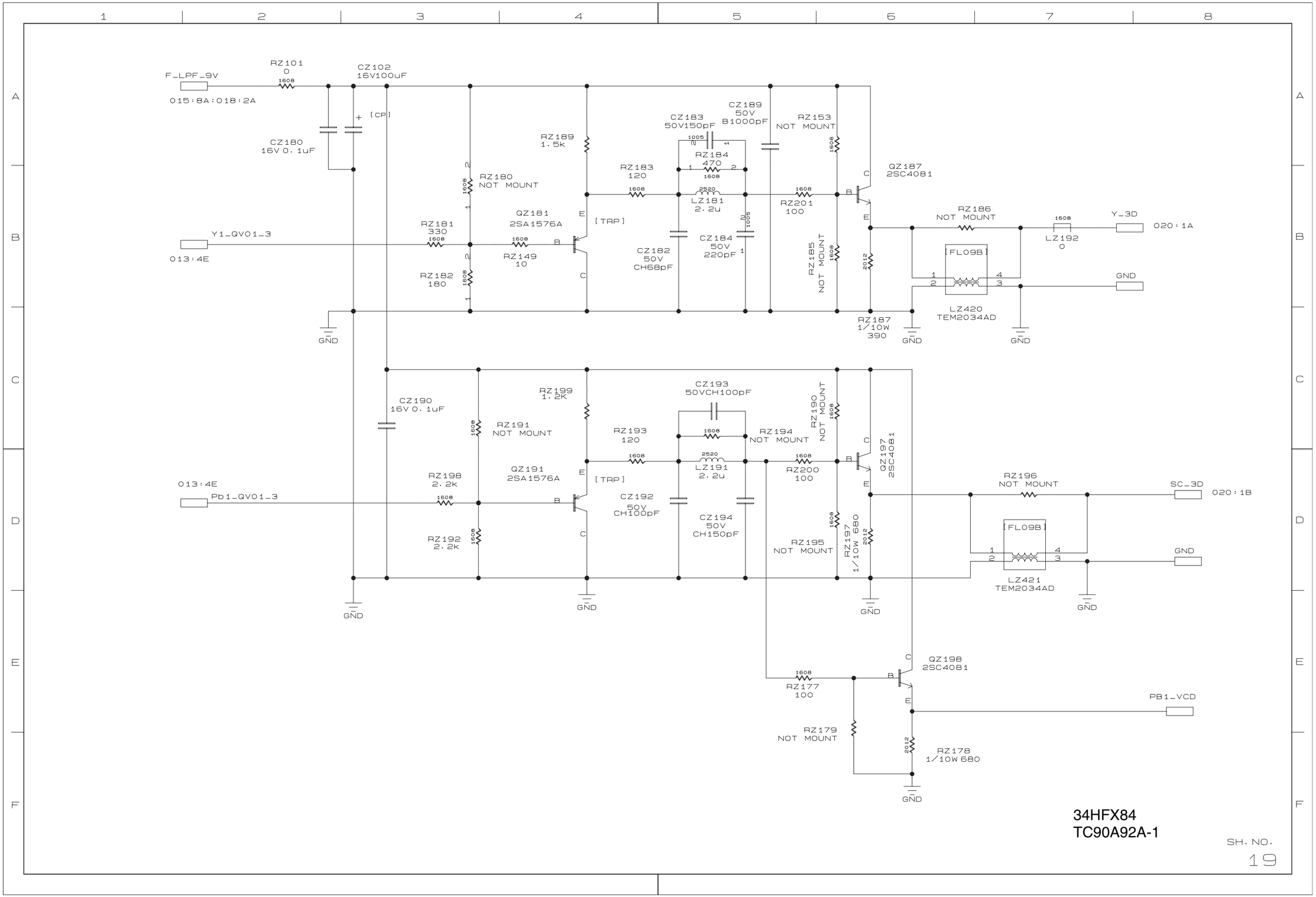
F_LPF_9V
015:8A:018:2A
RZ101
0
1608
CZ102
16V100uF
CZ180
16V 0.1uF
[CP]
RZ189
1.5k
CZ183
50V150pF
1005
CZ189
50V
B1000pF
RZ153
NOT MOUNT
RZ184
470
1608
RZ183
120
2520
LZ181
2.2u
RZ201
100
QZ187
2SC4081
RZ180
NOT MOUNT
Y1_QV01_3
013:4E
RZ181
330
QZ181
2SA1576A
[TRP]
RZ149
10
RZ182
180
CZ182
50V
CH68pF
CZ184
50V
220pF
RZ185
NOT MOUNT
2012
RZ187
1/10W
390
RZ186
NOT MOUNT
LZ192
0
Y_3D
020:1A
[FL09B]
LZ420
TEM2034AD
GND
CZ190
16V 0.1uF
RZ199
1.2K
CZ193
50VCH100pF
RZ190
NOT MOUNT
RZ191
NOT MOUNT
RZ193
120
RZ194
NOT MOUNT
LZ191
2.2u
RZ200
100
QZ197
2SC4081
013:4E
Pb1_QV01_3
RZ198
2.2k
QZ191
2SA1576A
[TRP]
CZ192
50V
CH100pF
CZ194
50V
CH150pF
RZ192
2.2k
RZ195
NOT MOUNT
RZ197
1/10W 680
RZ196
NOT MOUNT
SC_3D
020:1B
[FL09B]
LZ421
TEM2034AD
QZ198
2SC4081
RZ177
100
PB1_VCD
RZ179
NOT MOUNT
RZ178
1/10W 680
34HFX84
TC90A92A-1
SH. NO.
19

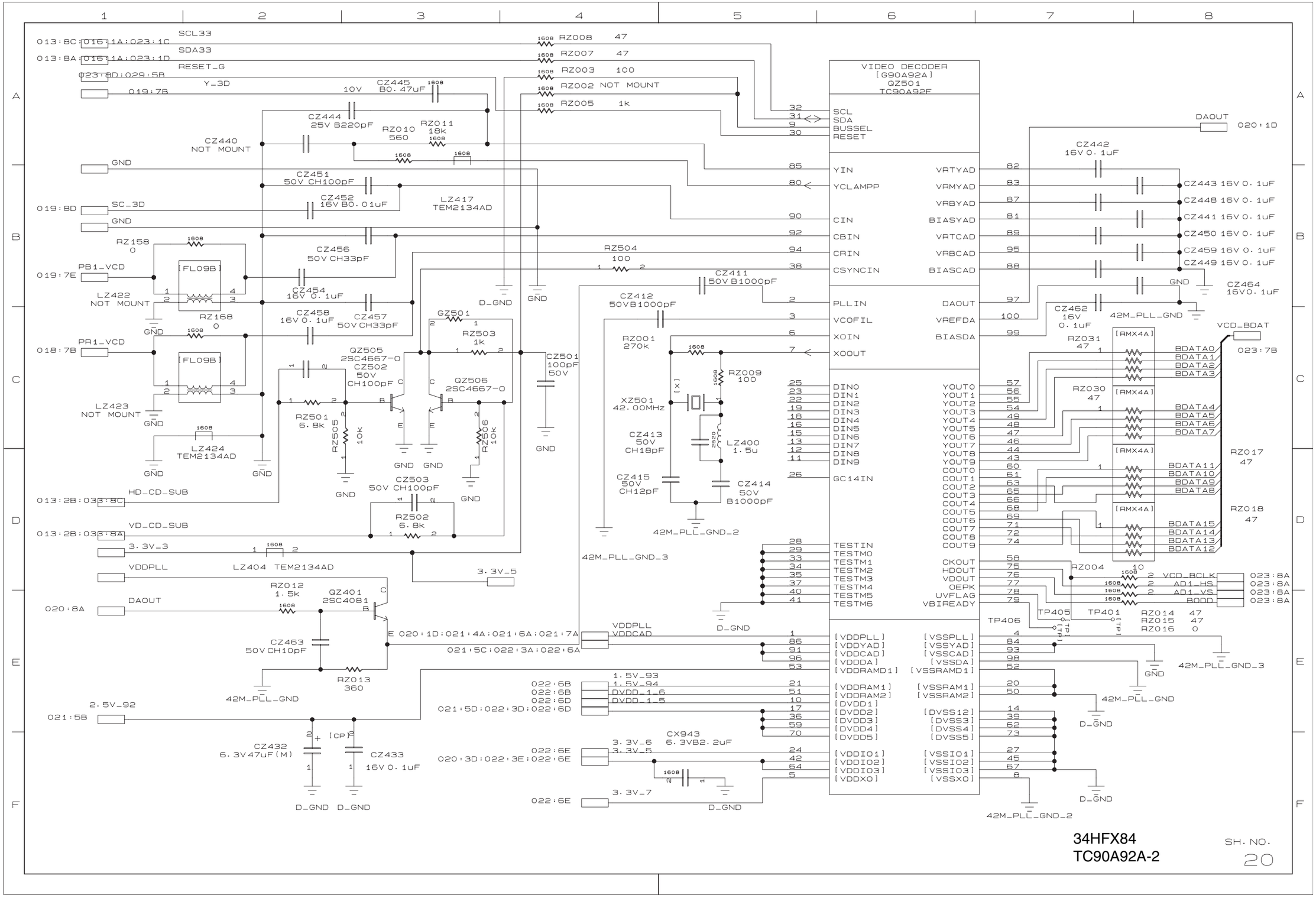

34HFX84
TC90A92A-2

SH. NO.
20

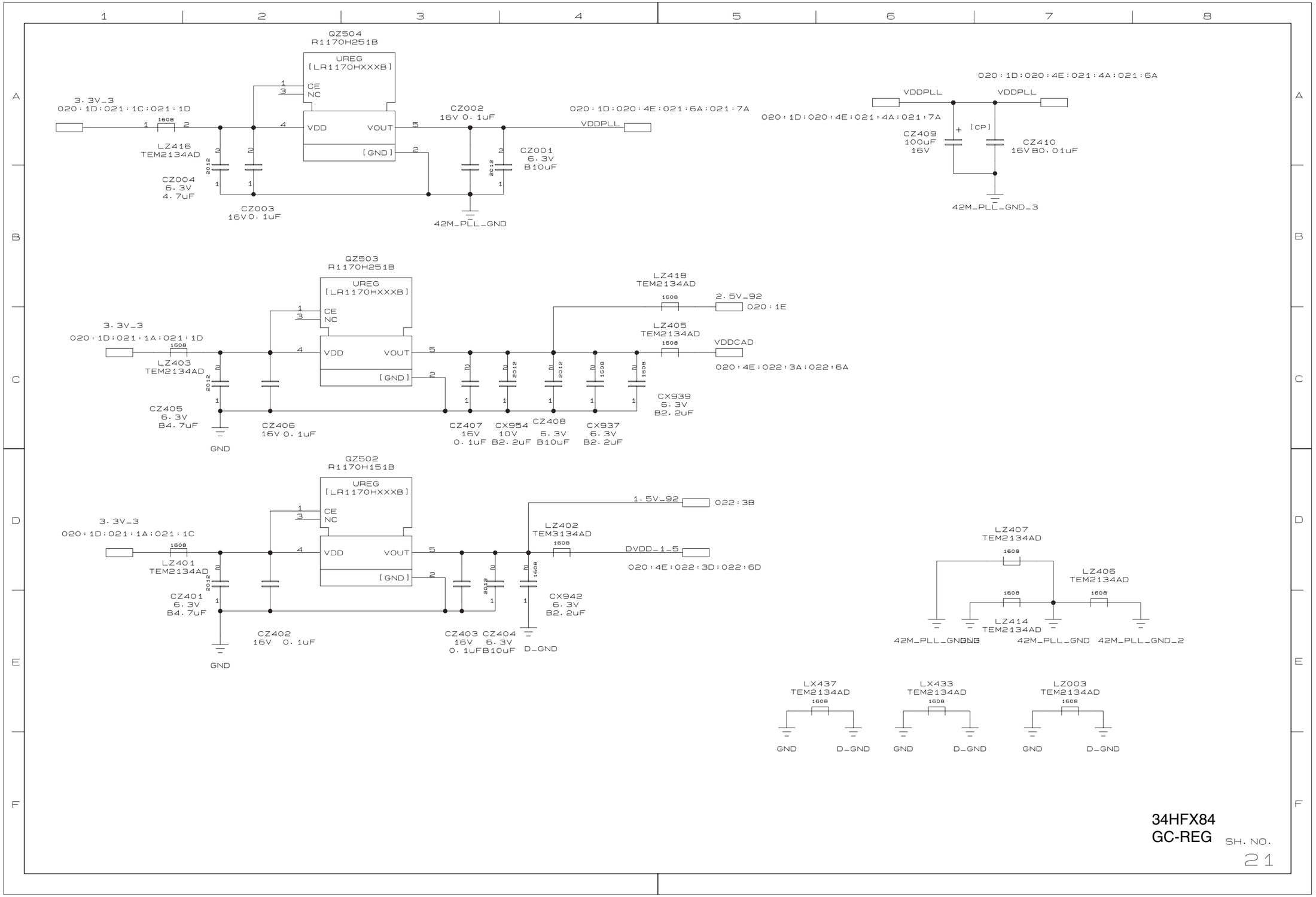

34HFX84
GC-REG

SH. NO.
21

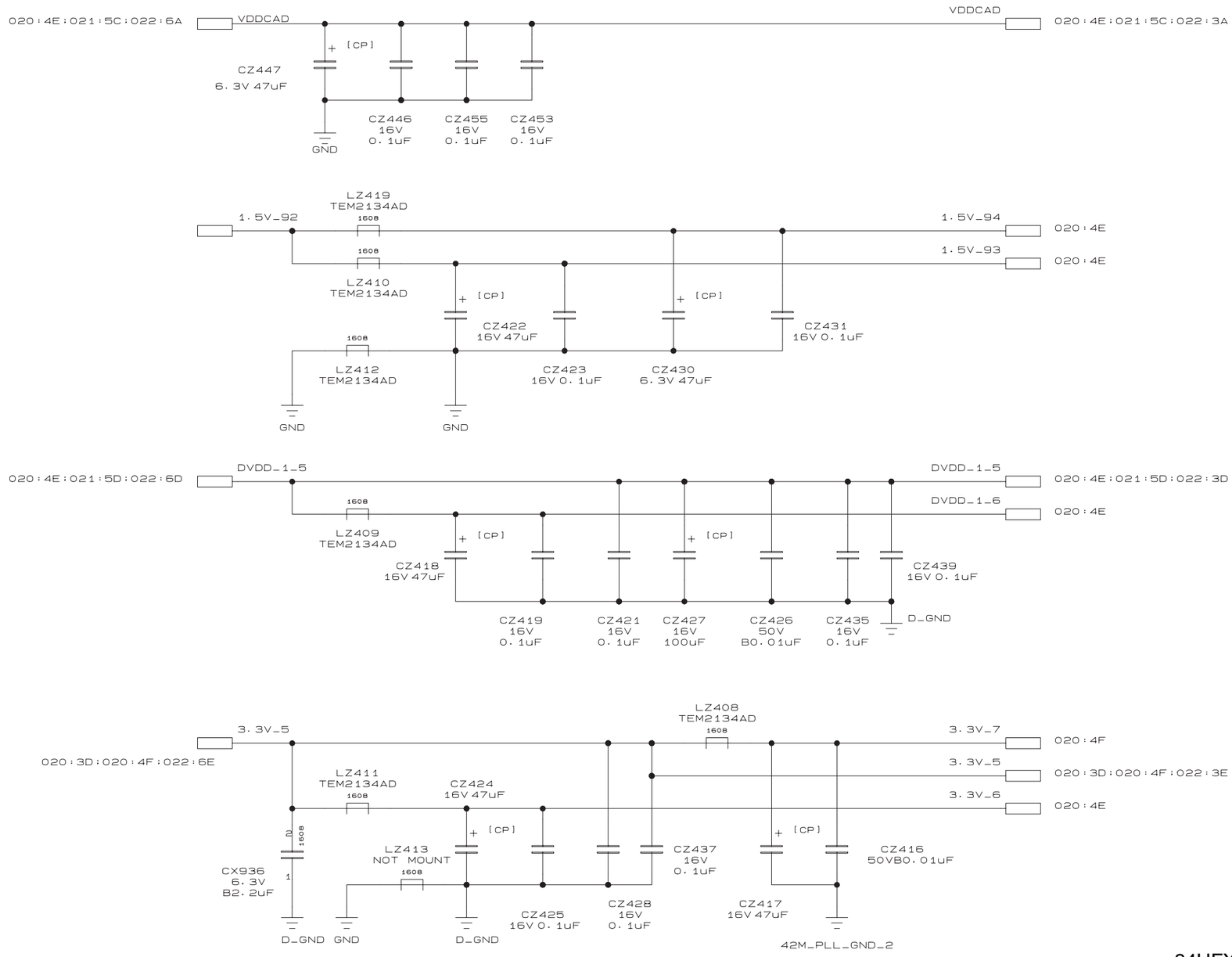

34HFX84
TC90A92A-3

SH. NO.
22

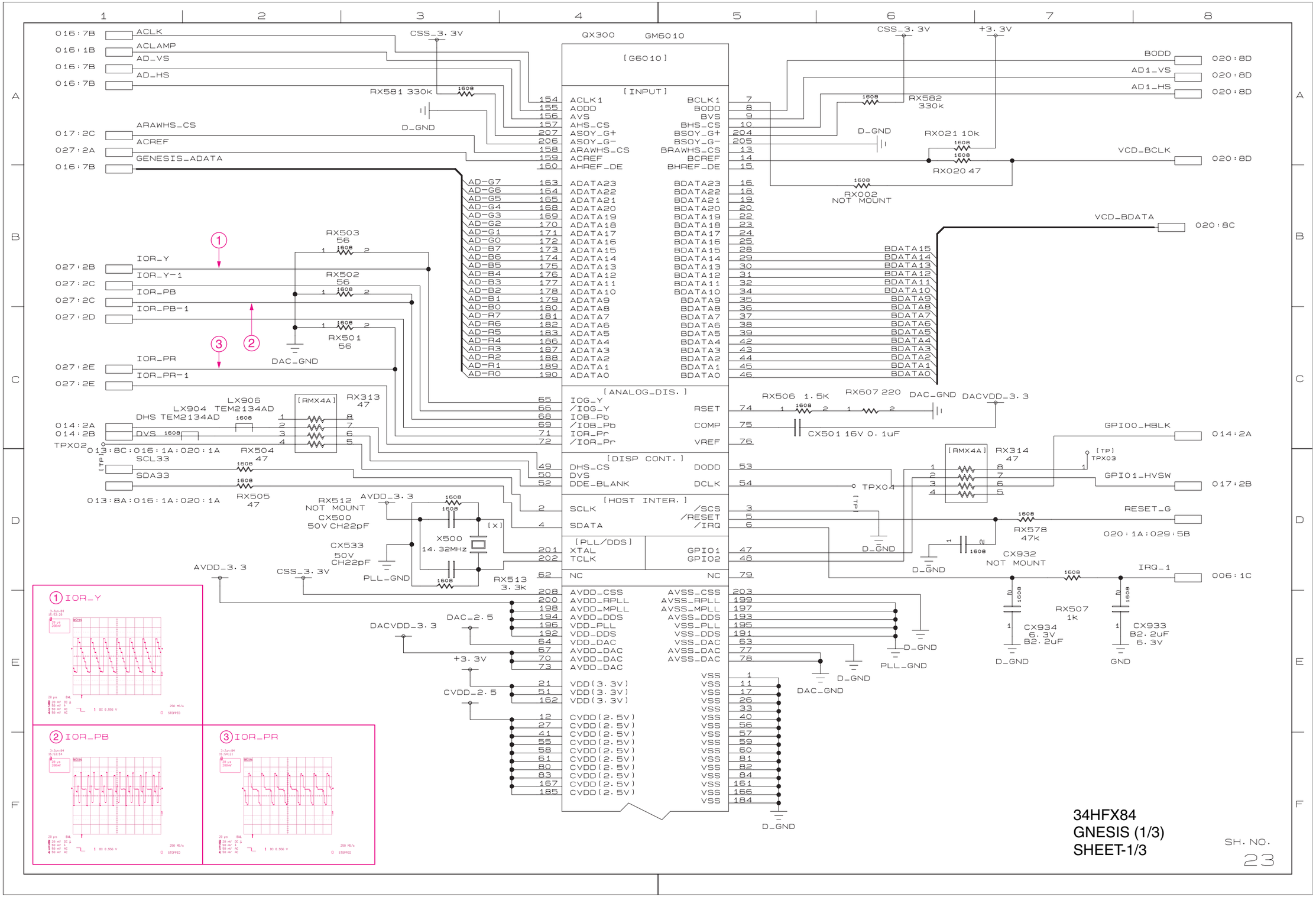
QX300 GM6010
[G6010]
[INPUT]
[ANALOG_DIS.]
[DISP CONT.]
[HOST INTER.]
[PLL/DDS]
ACLK
ACLAMP
AD_VS
AD_HS
ARAWHS_CS
ACREF
GENESIS_ADATA
IOR_Y
IOR_Y-1
IOR_PB
IOR_PB-1
IOR_PR
IOR_PR-1
DHS TEM2134AD
LX904 TEM2134AD
LX906
DVS
SCL33
SDA33
CSS_3.3V
D_GND
DAC_GND
PLL_GND
AVDD_3.3
DACVDD_3.3
DAC_2.5
+3.3V
CVDD_2.5
DACVDD_3.3
BODD
AD1_VS
AD1_HS
VCD_BCLK
VCD_BDATA
GPIO0_HBLK
GPIO1_HVSW
RESET_G
IRQ_1
TPX02
TPX03
TPX04
X500
14.32MHz
CX533
50V
CH22pF
CX500
50V CH22pF
RX581 330k
RX582
330k
RX021 10k
RX020 47
RX002
NOT MOUNT
RX503
56
RX502
56
RX501
56
RX313
47
RX314
47
RX504
47
RX505
47
RX512
NOT MOUNT
RX513
3.3k
RX506 1.5K
RX607 220
CX501 16V 0.1uF
RX578
47k
CX932
NOT MOUNT
RX507
1k
CX934
6.3V
B2.2uF
CX933
B2.2uF
6.3V
GND
34HFX84
GNESIS (1/3)
SHEET-1/3
SH. NO.
23

Capasitor for QX300

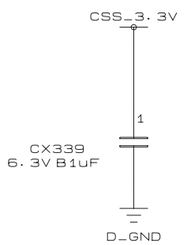

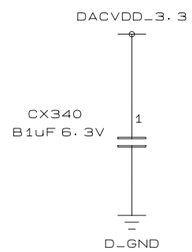

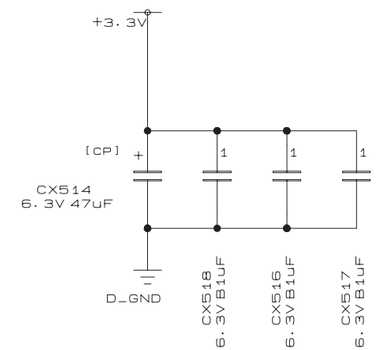

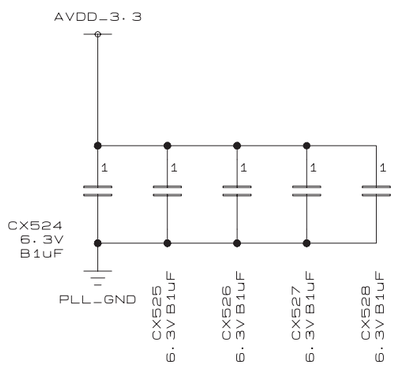

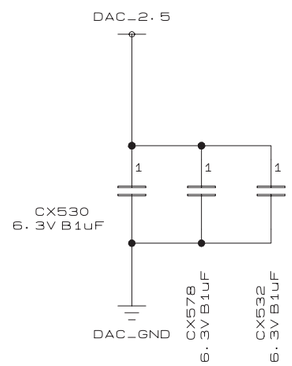

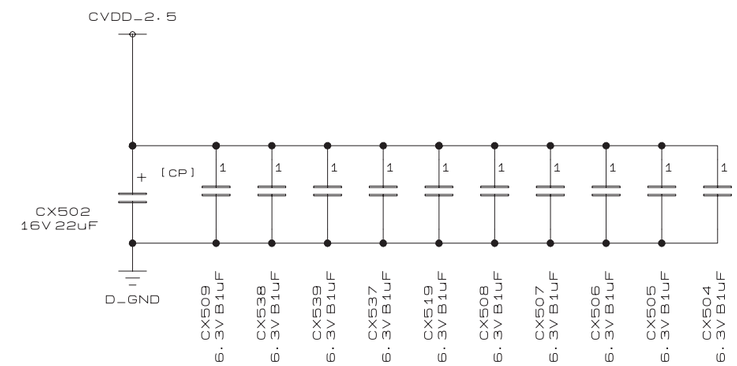

34HFX84
GNESIS (2/3)
SHEET-2/3

SH. NO.
24

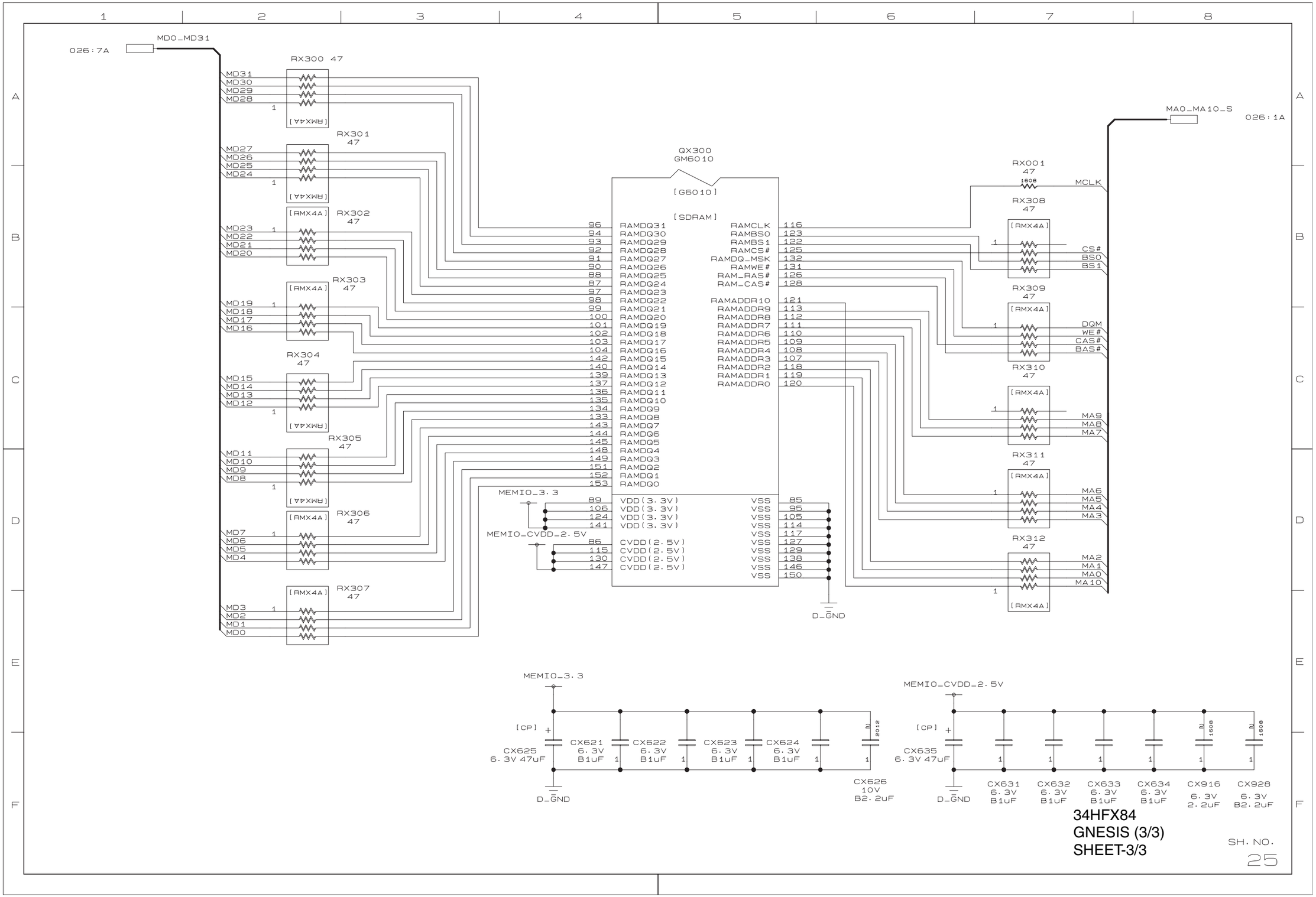
MD0_MD31
026:7A
RX300 47
RX301 47
RX302 47
RX303 47
RX304 47
RX305 47
RX306 47
RX307 47
[RMX4A]
QX300
GM6010
[G6010]
[SDRAM]
RAMDQ31
RAMDQ30
RAMDQ29
RAMDQ28
RAMDQ27
RAMDQ26
RAMDQ25
RAMDQ24
RAMDQ23
RAMDQ22
RAMDQ21
RAMDQ20
RAMDQ19
RAMDQ18
RAMDQ17
RAMDQ16
RAMDQ15
RAMDQ14
RAMDQ13
RAMDQ12
RAMDQ11
RAMDQ10
RAMDQ9
RAMDQ8
RAMDQ7
RAMDQ6
RAMDQ5
RAMDQ4
RAMDQ3
RAMDQ2
RAMDQ1
RAMDQ0
RAMCLK
RAMBS0
RAMBS1
RAMCS#
RAMDQ_MSK
RAMWE#
RAM_RAS#
RAM_CAS#
RAMADDR10
RAMADDR9
RAMADDR8
RAMADDR7
RAMADDR6
RAMADDR5
RAMADDR4
RAMADDR3
RAMADDR2
RAMADDR1
RAMADDR0
VDD(3.3V)
CVDD(2.5V)
VSS
MEMIO_3.3
MEMIO_CVDD_2.5V
D_GND
RX001 47
1608
MCLK
RX308 47
CS#
BS0
BS1
RX309 47
DQM
WE#
CAS#
BAS#
RX310 47
MA9
MA8
MA7
RX311 47
MA6
MA5
MA4
MA3
RX312 47
MA2
MA1
MA0
MA10
MA0_MA10_S
026:1A
[CP]
CX625 6.3V 47uF
CX621 6.3V B1uF
CX622 6.3V B1uF
CX623 6.3V B1uF
CX624 6.3V B1uF
2012
CX626 10V B2.2uF
CX635 6.3V 47uF
CX631 6.3V B1uF
CX632 6.3V B1uF
CX633 6.3V B1uF
CX634 6.3V B1uF
CX916 6.3V 2.2uF
CX928 6.3V B2.2uF
34HFX84
GNESIS (3/3)
SHEET-3/3
SH. NO.
25

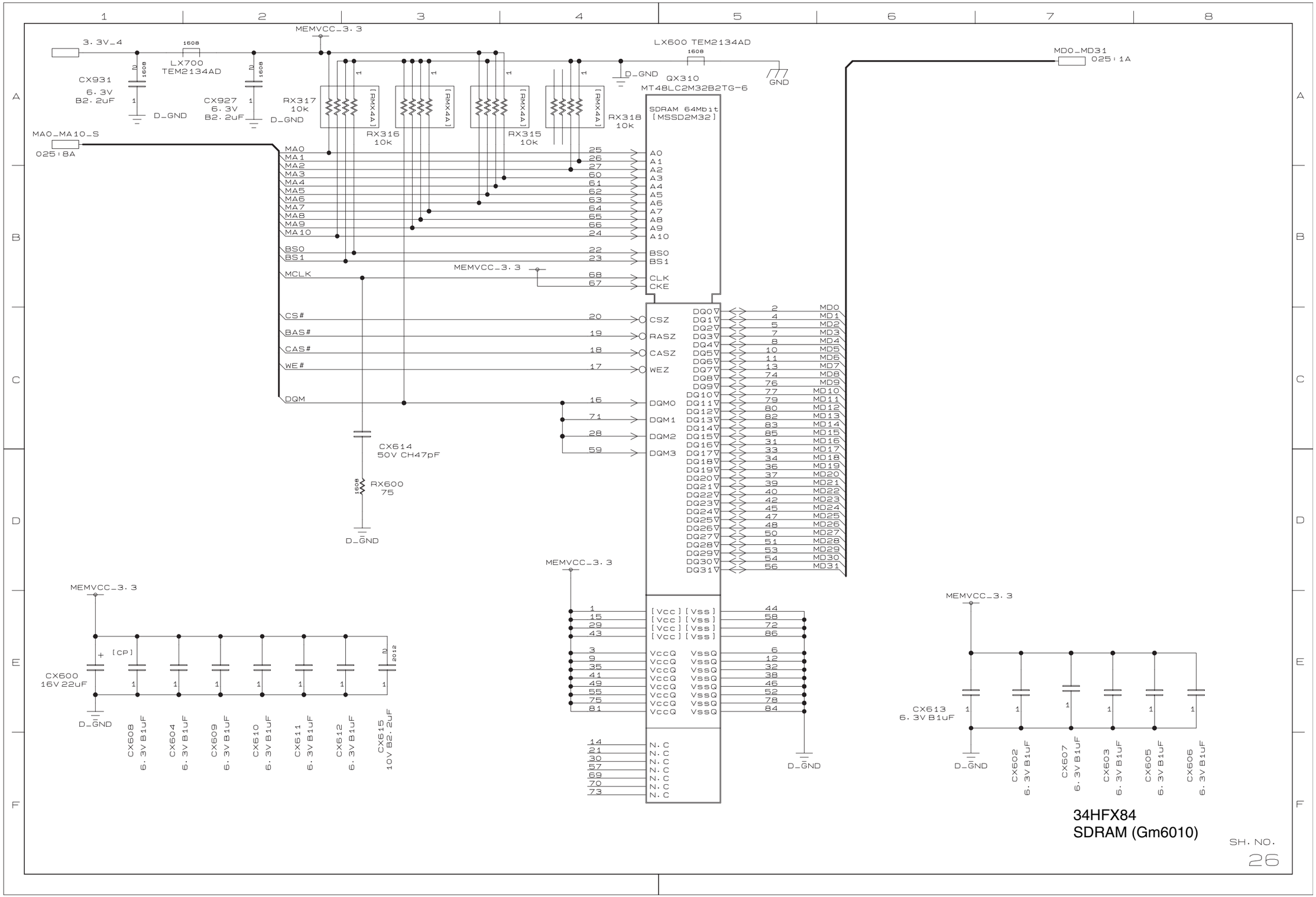
3.3V_4
LX700 TEM2134AD
CX931 6.3V B2.2uF
CX927 6.3V B2.2uF
D_GND
MEMVCC_3.3
RX317 10k
RX316 10k
RX315 10k
RX318 10k
[RMX4A]
LX600 TEM2134AD
QX310 MT48LC2M32B2TG-6
GND
MD0_MD31
025:1A
MA0_MA10_S
025:8A
SDRAM 64Mbit [MSSD2M32]
MA0
MA1
MA2
MA3
MA4
MA5
MA6
MA7
MA8
MA9
MA10
BS0
BS1
MCLK
CS#
BAS#
CAS#
WE#
DQM
CSZ
RASZ
CASZ
WEZ
DQM0
DQM1
DQM2
DQM3
CX614 50V CH47pF
RX600 75
[Vcc]
[Vss]
VccQ
VssQ
N.C
CX600 16V 22uF
[CP]
CX608 6.3V B1uF
CX604 6.3V B1uF
CX609 6.3V B1uF
CX610 6.3V B1uF
CX611 6.3V B1uF
CX612 6.3V B1uF
CX615 10V B2.2uF
CX613 6.3V B1uF
CX602 6.3V B1uF
CX607 6.3V B1uF
CX603 6.3V B1uF
CX605 6.3V B1uF
CX606 6.3V B1uF
34HFX84
SDRAM (Gm6010)
SH. NO.
26

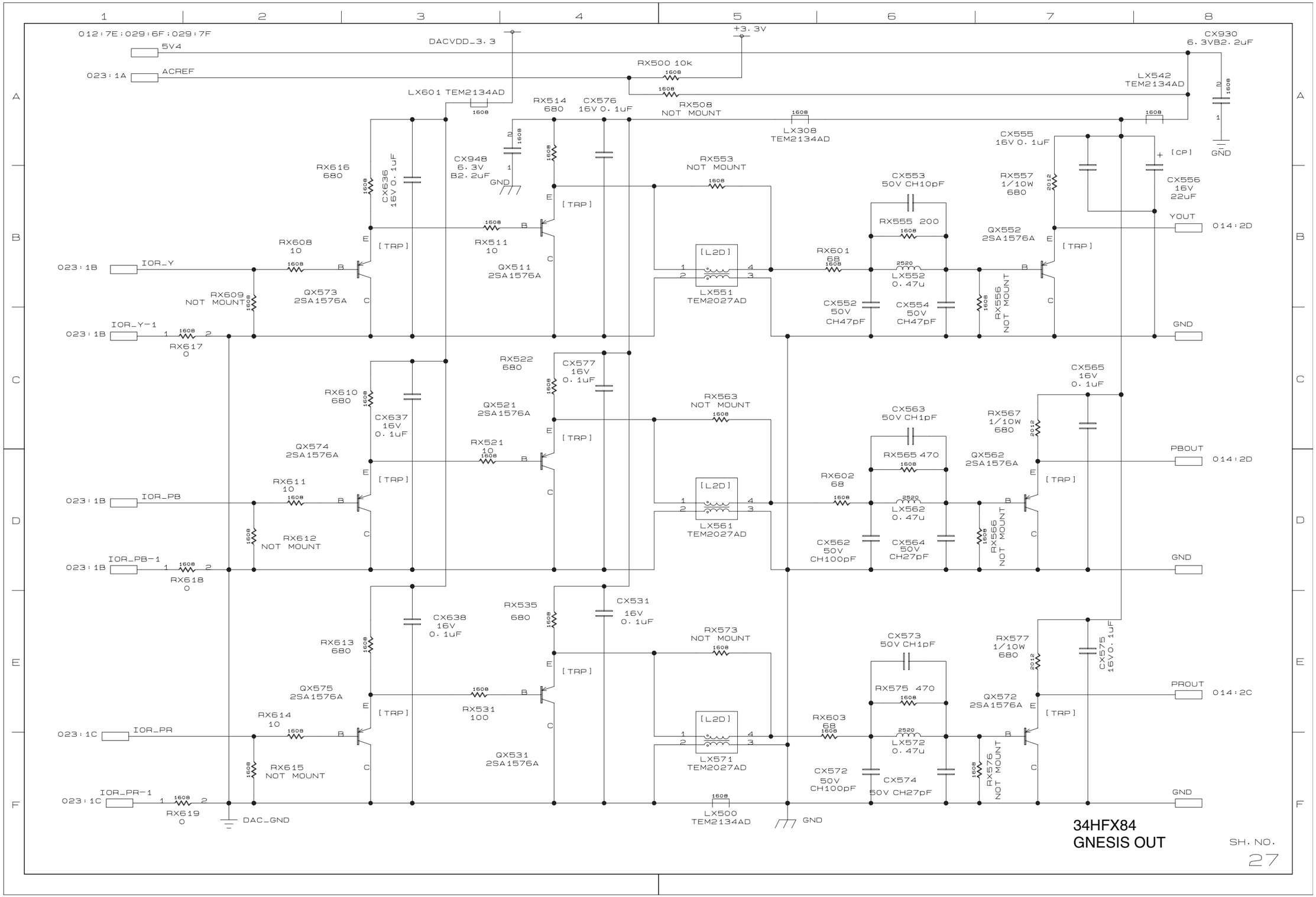
012:7E:029:6F:029:7F
5V4
023:1A
ACREF
DACVDD_3.3
+3.3V
CX930
6.3VB2.2uF
RX500 10k
LX542
TEM2134AD
LX601 TEM2134AD
RX514
680
CX576
16V 0.1uF
RX508
NOT MOUNT
LX308
TEM2134AD
CX555
16V 0.1uF
[CP]
GND
RX616
680
CX536
16V 0.1uF
CX948
6.3V
B2.2uF
RX553
NOT MOUNT
CX553
50V CH10pF
RX557
1/10W
680
CX556
16V
22uF
YOUT
014:2D
[TRP]
RX555 200
QX552
2SA1576A
RX608
10
RX511
10
QX511
2SA1576A
023:1B
IOR_Y
[L2D]
RX601
68
LX552
0.47u
LX551
TEM2027AD
RX556
NOT MOUNT
RX609
NOT MOUNT
QX573
2SA1576A
CX552
50V
CH47pF
CX554
50V
CH47pF
IOR_Y-1
RX617
0
RX522
680
CX577
16V
0.1uF
CX565
16V
0.1uF
RX610
680
CX637
16V
0.1uF
QX521
2SA1576A
RX563
NOT MOUNT
CX563
50V CH1pF
RX567
1/10W
680
PBOUT
014:2D
QX574
2SA1576A
RX521
10
RX565 470
QX562
2SA1576A
RX611
10
IOR_PB
RX602
68
LX562
0.47u
LX561
TEM2027AD
RX612
NOT MOUNT
RX566
NOT MOUNT
CX562
50V
CH100pF
CX564
50V
CH27pF
IOR_PB-1
RX618
0
RX535
680
CX531
16V
0.1uF
CX638
16V
0.1uF
RX573
NOT MOUNT
CX573
50V CH1pF
RX577
1/10W
680
CX575
16V0.1uF
RX613
680
QX575
2SA1576A
RX575 470
QX572
2SA1576A
PROUT
014:2C
RX614
10
RX531
100
IOR_PR
RX603
68
LX572
0.47u
LX571
TEM2027AD
RX615
NOT MOUNT
QX531
2SA1576A
RX576
NOT MOUNT
CX572
50V
CH100pF
CX574
50V CH27pF
IOR_PR-1
RX619
0
DAC_GND
LX500
TEM2134AD
34HFX84
GNESIS OUT
SH. NO.
27

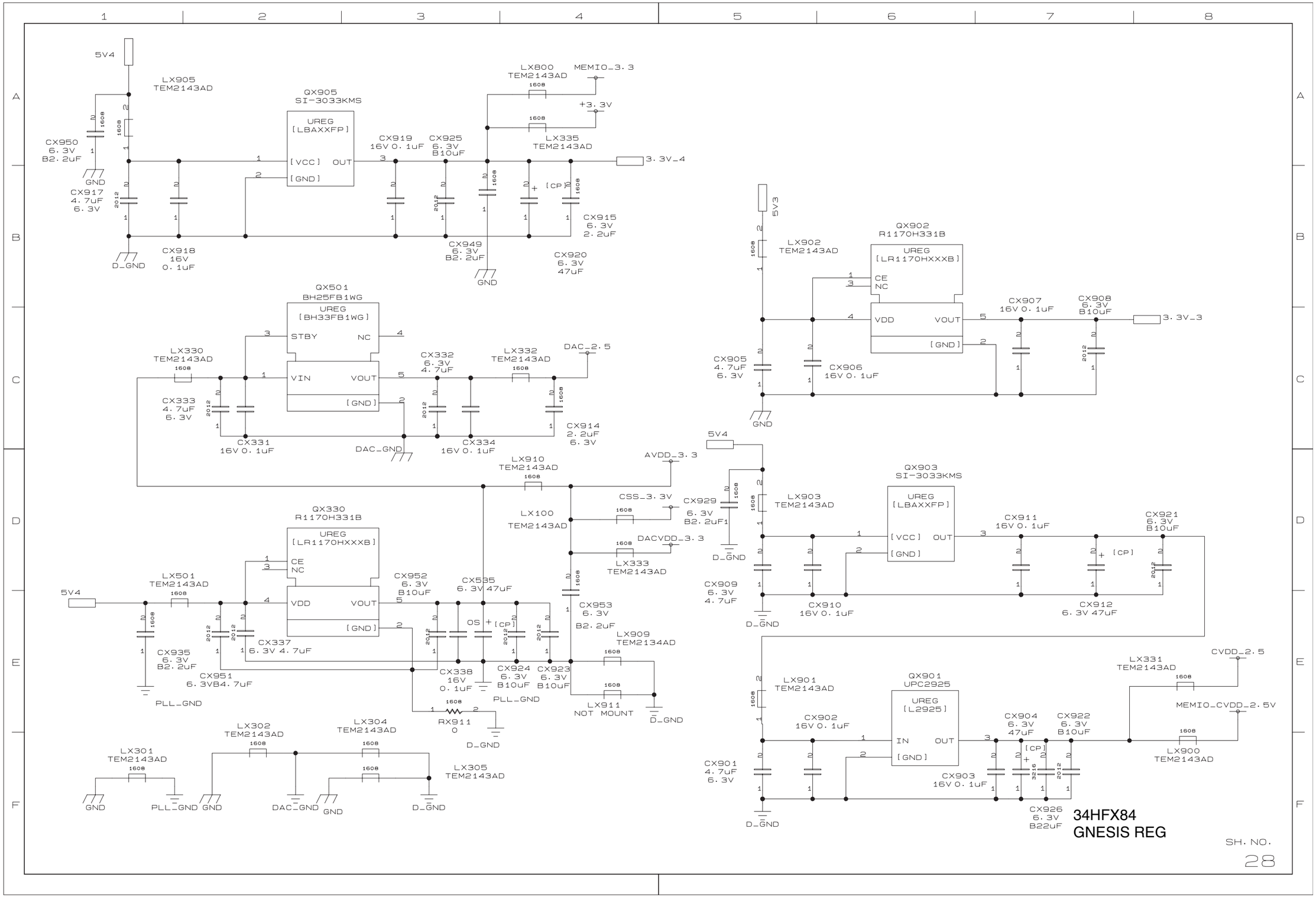
5V4
LX905
TEM2143AD
QX905
SI-3033KMS
UREG
[LBAXXFP]
[VCC]
OUT
[GND]
CX950
6.3V
B2.2uF
GND
CX917
4.7uF
6.3V
D_GND
CX918
16V
0.1uF
CX919
16V 0.1uF
CX925
6.3V
B10uF
LX800
TEM2143AD
MEMIO_3.3
+3.3V
LX335
TEM2143AD
3.3V_4
[CP]
CX915
6.3V
2.2uF
CX949
6.3V
B2.2uF
CX920
6.3V
47uF
QX501
BH25FB1WG
UREG
[BH33FB1WG]
STBY
NC
VIN
VOUT
LX330
TEM2143AD
CX333
4.7uF
6.3V
CX331
16V 0.1uF
CX332
6.3V
4.7uF
LX332
TEM2143AD
DAC_2.5
CX914
2.2uF
6.3V
DAC_GND
CX334
16V 0.1uF
LX910
TEM2143AD
AVDD_3.3
CSS_3.3V
CX929
6.3V
B2.2uF1
LX100
TEM2143AD
DACVDD_3.3
LX333
TEM2143AD
QX330
R1170H331B
UREG
[LR1170HXXXB]
CE
NC
VDD
VOUT
[GND]
LX501
TEM2143AD
CX952
6.3V
B10uF
CX535
6.3V 47uF
CX953
6.3V
B2.2uF
CX935
6.3V
B2.2uF
CX337
6.3V 4.7uF
CX951
6.3VB4.7uF
CX338
16V
0.1uF
CX924
6.3V
B10uF
CX923
6.3V
B10uF
LX909
TEM2134AD
LX911
NOT MOUNT
PLL_GND
RX911
0
LX302
TEM2143AD
LX304
TEM2143AD
LX301
TEM2143AD
LX305
TEM2143AD
PLL_GND
DAC_GND
5V3
QX902
R1170H331B
LX902
TEM2143AD
CX907
16V 0.1uF
CX908
6.3V
B10uF
3.3V_3
CX905
4.7uF
6.3V
CX906
16V 0.1uF
LX903
TEM2143AD
QX903
SI-3033KMS
CX911
16V 0.1uF
CX921
6.3V
B10uF
CX909
6.3V
4.7uF
CX910
16V 0.1uF
CX912
6.3V 47uF
LX901
TEM2143AD
QX901
UPC2925
UREG
[L2925]
IN
OUT
CX902
16V 0.1uF
CX904
6.3V
47uF
CX922
6.3V
B10uF
CX901
4.7uF
6.3V
CX903
16V 0.1uF
CX926
6.3V
B22uF
LX331
TEM2143AD
CVDD_2.5
MEMIO_CVDD_2.5V
LX900
TEM2143AD
34HFX84
GNESIS REG
SH. NO.
28

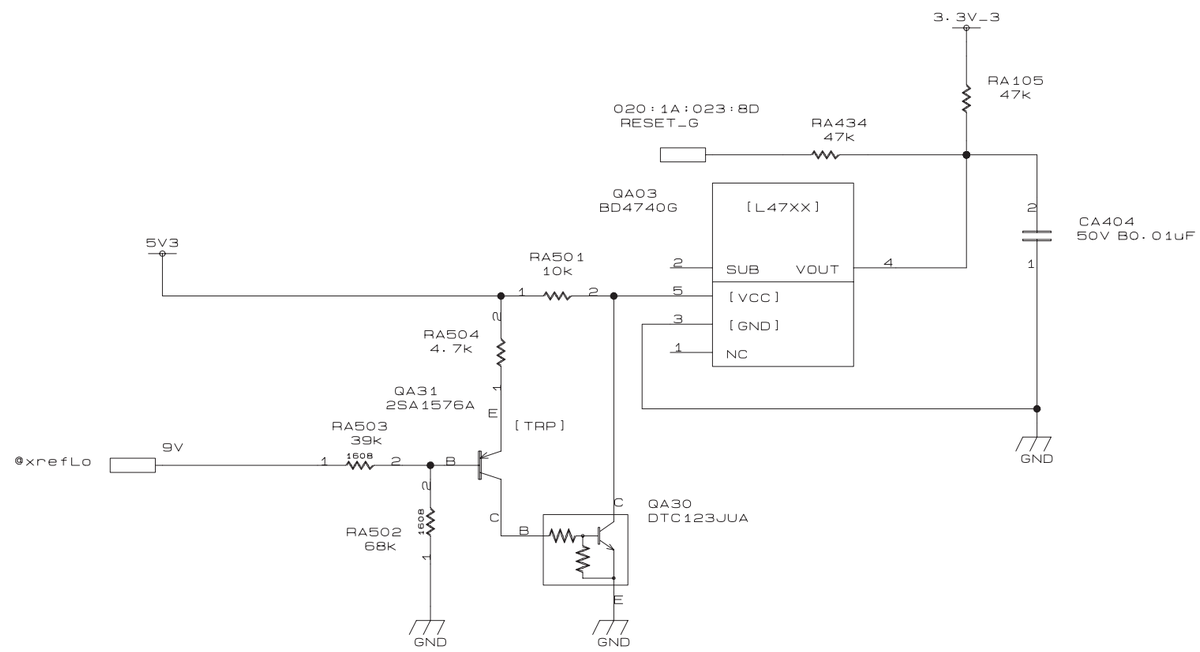

34HFX84
CPU

SH. NO.
29

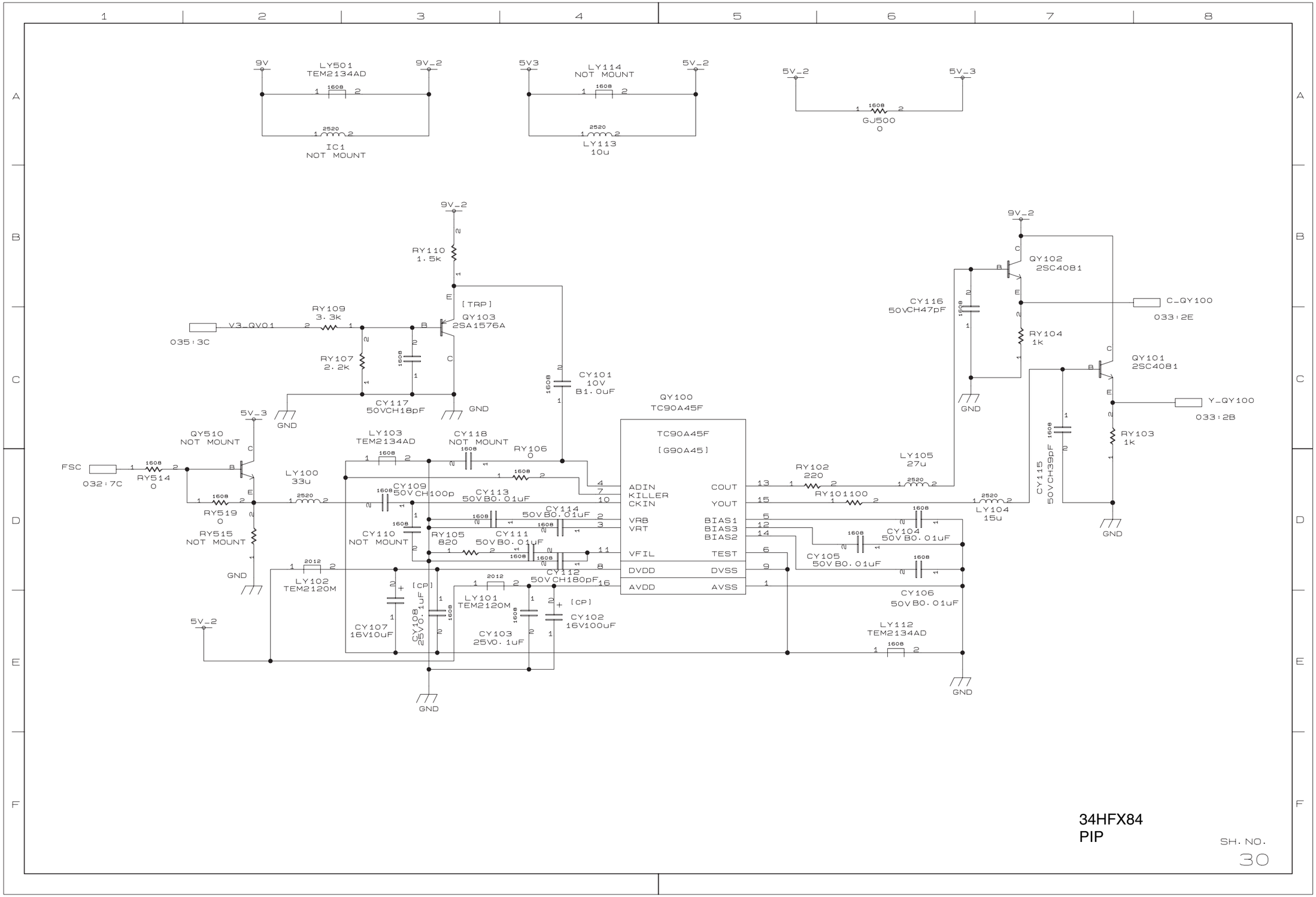
9V
LY501
TEM2134AD
9V_2
IC1
NOT MOUNT
5V3
LY114
NOT MOUNT
5V_2
LY113
10u
5V_2
5V_3
GJ500
0
9V_2
RY110
1.5k
[TRP]
QY103
2SA1576A
RY109
3.3k
V3_QV01
035:3C
RY107
2.2k
CY117
50VCH18pF
GND
CY101
10V
B1.0uF
QY100
TC90A45F
TC90A45F
[G90A45]
ADIN
KILLER
CKIN
VRB
VRT
VFIL
DVDD
AVDD
COUT
YOUT
BIAS1
BIAS3
BIAS2
TEST
DVSS
AVSS
5V_3
QY510
NOT MOUNT
FSC
032:7C
RY514
0
RY519
0
RY515
NOT MOUNT
LY100
33u
LY103
TEM2134AD
CY118
NOT MOUNT
RY106
0
CY109
50VCH100p
CY113
50VB0.01uF
CY114
50VB0.01uF
CY110
NOT MOUNT
RY105
820
CY111
50VB0.01uF
CY112
50VCH180pF
LY102
TEM2120M
LY101
TEM2120M
CY107
16V10uF
CY108
25V0.1uF
CY103
25V0.1uF
CY102
16V100uF
5V_2
RY102
220
RY101100
LY105
27u
LY104
15u
CY104
50VB0.01uF
CY105
50VB0.01uF
CY106
50VB0.01uF
LY112
TEM2134AD
9V_2
QY102
2SC4081
CY116
50VCH47pF
C_QY100
033:2E
RY104
1k
QY101
2SC4081
Y_QY100
033:2B
RY103
1k
CY115
50VCH39pF
GND
34HFX84
PIP
SH. NO.
30

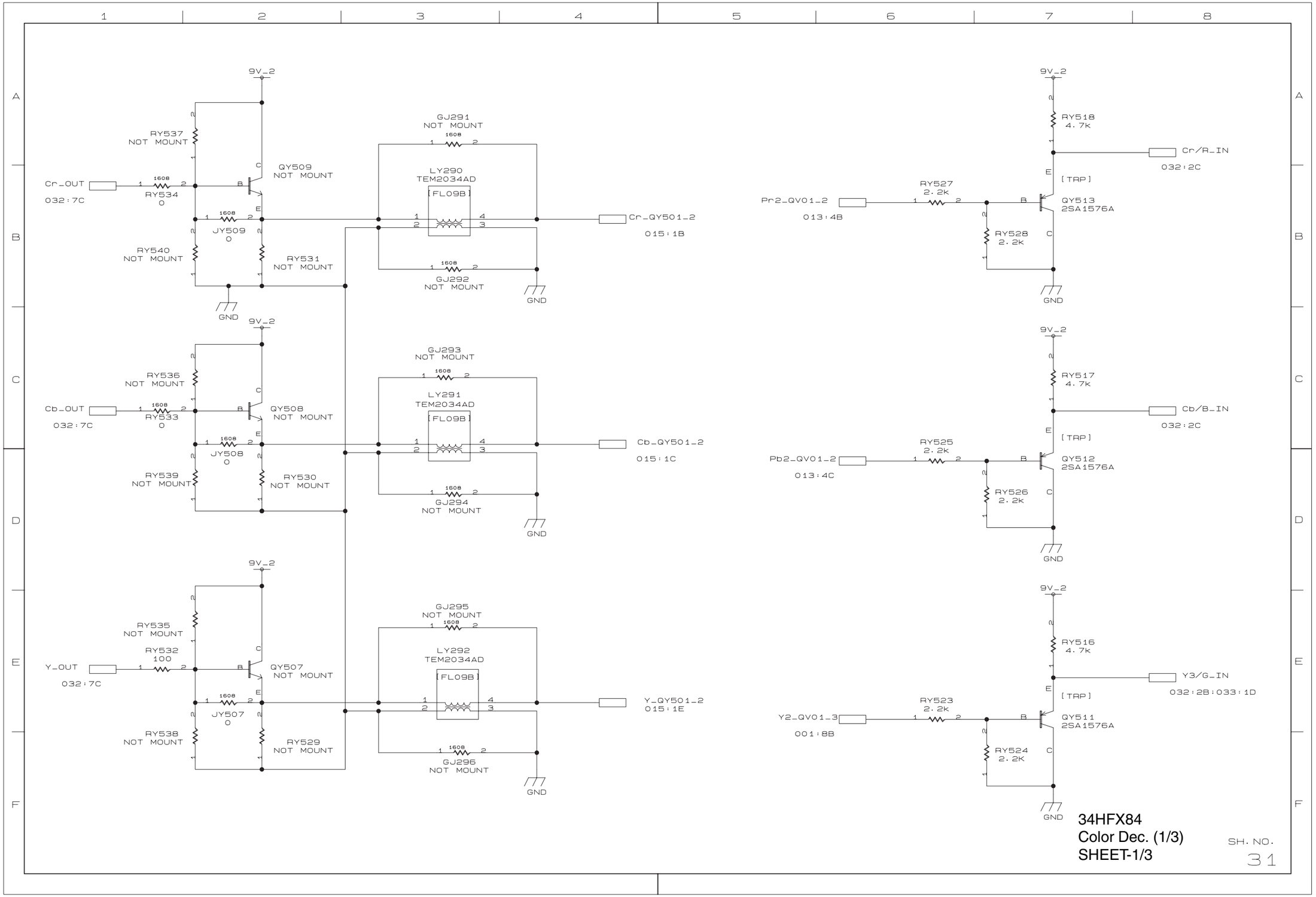
9V_2
RY537
NOT MOUNT
QY509
NOT MOUNT
Cr_OUT
032:7C
RY534
0
JY509
0
RY540
NOT MOUNT
RY531
NOT MOUNT
GND
GJ291
NOT MOUNT
LY290
TEM2034AD
[FL09B]
GJ292
NOT MOUNT
Cr_QY501_2
015:1B
RY536
NOT MOUNT
QY508
NOT MOUNT
Cb_OUT
032:7C
RY533
0
JY508
0
RY539
NOT MOUNT
RY530
NOT MOUNT
GJ293
NOT MOUNT
LY291
TEM2034AD
[FL09B]
GJ294
NOT MOUNT
Cb_QY501_2
015:1C
RY535
NOT MOUNT
RY532
100
QY507
NOT MOUNT
Y_OUT
032:7C
JY507
0
RY538
NOT MOUNT
RY529
NOT MOUNT
GJ295
NOT MOUNT
LY292
TEM2034AD
[FL09B]
GJ296
NOT MOUNT
Y_QY501_2
015:1E
RY518
4.7k
Cr/R_IN
032:2C
[TRP]
Pr2_QV01_2
013:4B
RY527
2.2k
QY513
2SA1576A
RY528
2.2k
RY517
4.7k
Cb/B_IN
032:2C
Pb2_QV01_2
013:4C
RY525
2.2k
QY512
2SA1576A
RY526
2.2k
RY516
4.7k
Y3/G_IN
032:2B:033:1D
Y2_QV01_3
001:8B
RY523
2.2k
QY511
2SA1576A
RY524
2.2K
34HFX84
Color Dec. (1/3)
SHEET-1/3
SH. NO.
31

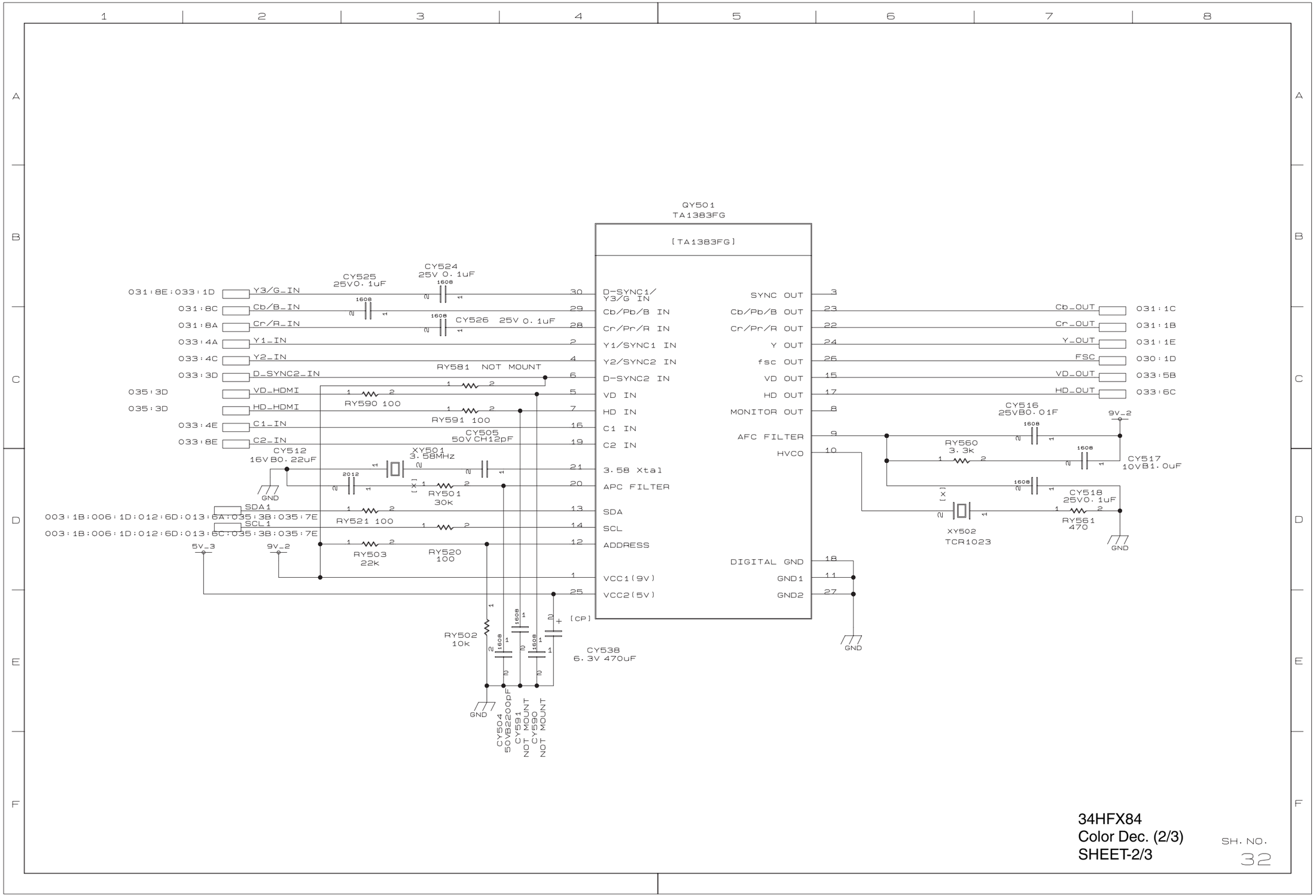

34HFX84
Color Dec. (2/3)
SHEET-2/3

SH. NO.
32

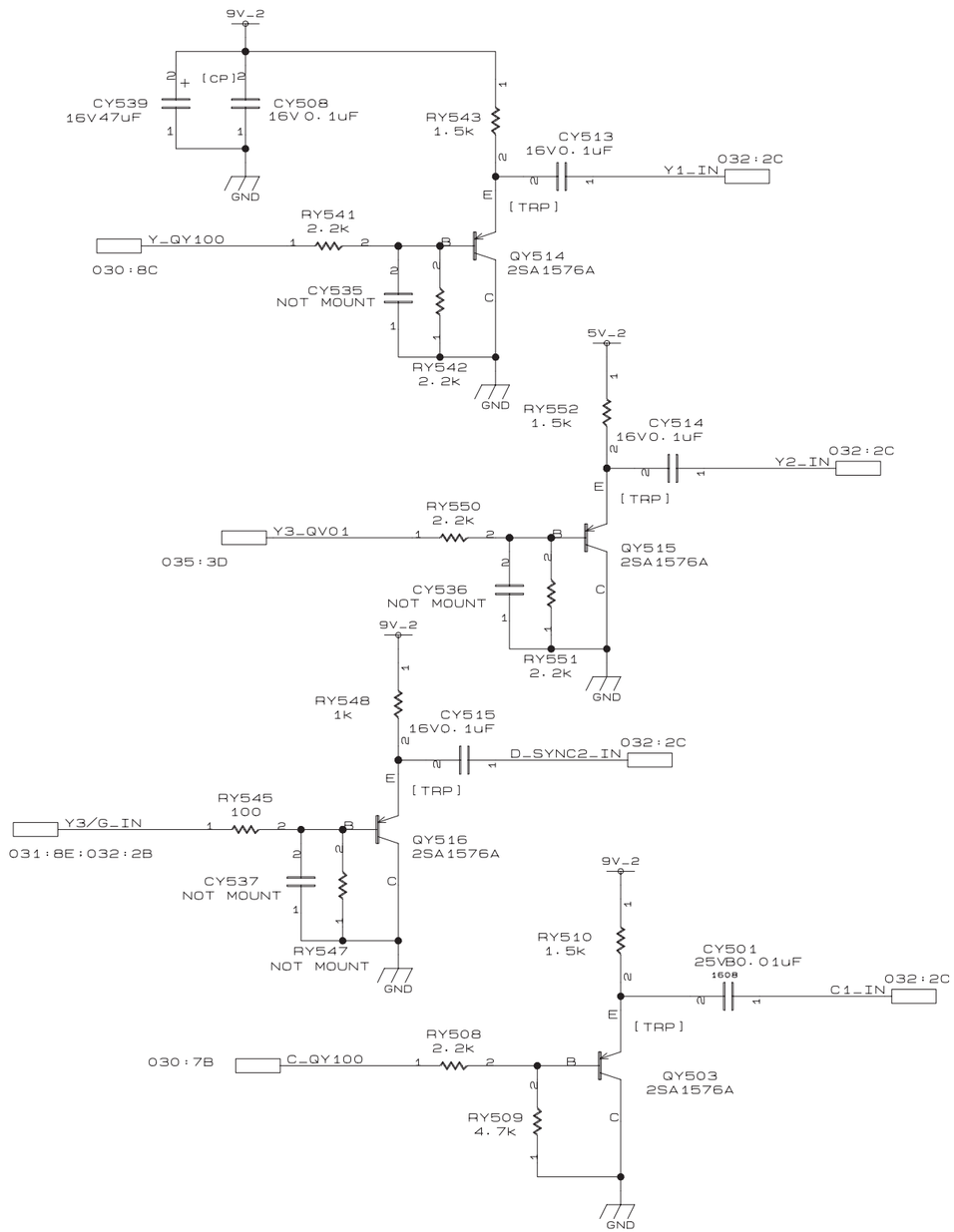

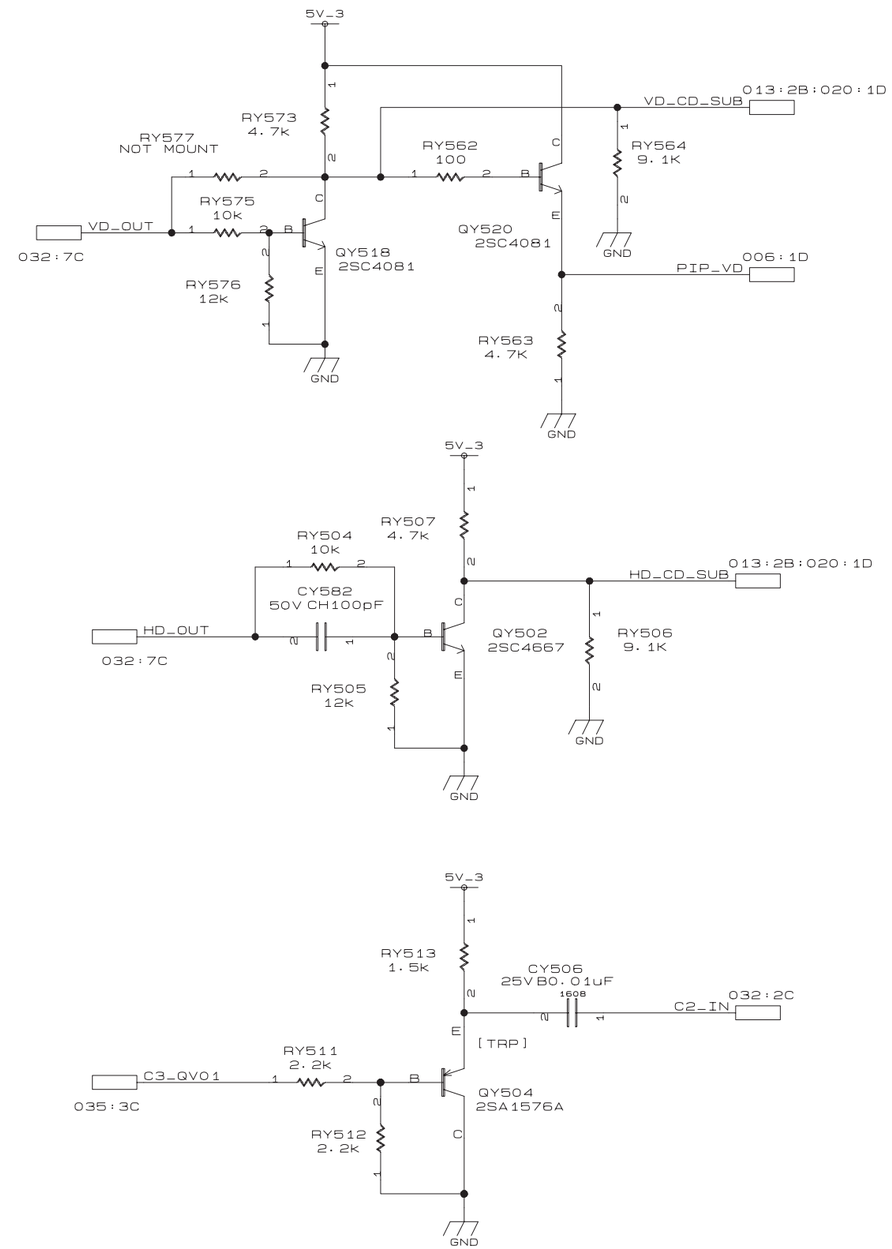

34HFX84
Color Dec. (3/3)
SHEET-3/3

SH. NO.
33

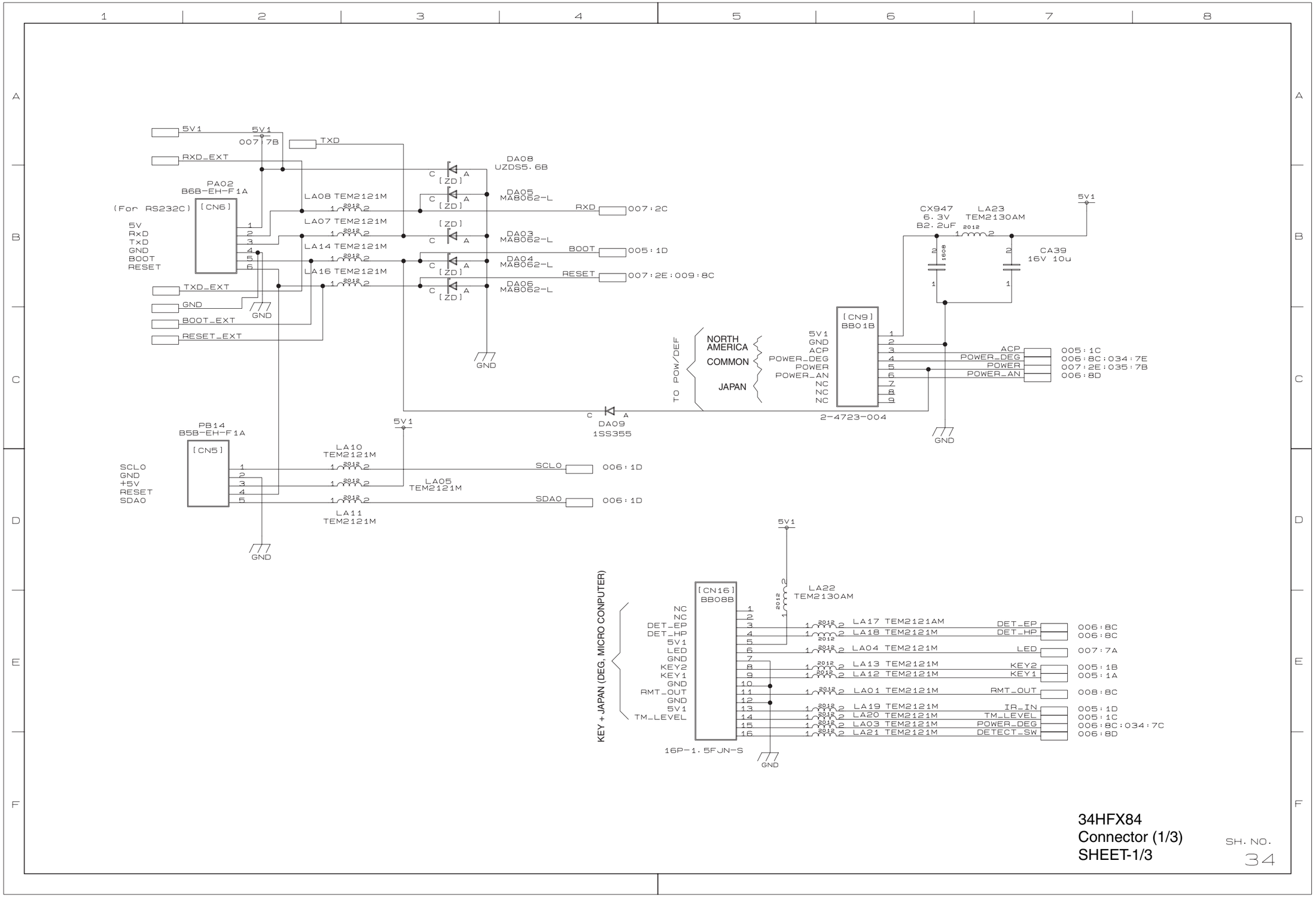
5V1
007:7B
TXD
RXD_EXT
PA02
B6B-EH-F1A
(For RS232C)
[CN6]
5V
RXD
TXD
GND
BOOT
RESET
TXD_EXT
GND
BOOT_EXT
RESET_EXT
LA08 TEM2121M
LA07 TEM2121M
LA14 TEM2121M
LA16 TEM2121M
DA08
UZDS5.6B
DA05
MA8062-L
DA03
MA8062-L
DA04
MA8062-L
DA06
MA8062-L
[ZD]
RXD
007:2C
BOOT
005:1D
RESET
007:2E:009:8C
CX947
6.3V
B2.2uF
LA23
TEM2130AM
CA39
16V 10u
[CN9]
BB01B
TO POW/DEF
NORTH AMERICA
COMMON
JAPAN
5V1
GND
ACP
POWER_DEG
POWER
POWER_AN
NC
NC
NC
2-4723-004
005:1C
006:8C:034:7E
007:2E:035:7B
006:8D
DA09
1SS355
PB14
B5B-EH-F1A
[CN5]
SCLO
GND
+5V
RESET
SDAO
LA10
TEM2121M
LA05
TEM2121M
LA11
TEM2121M
006:1D
006:1D
[CN16]
BB08B
KEY + JAPAN (DEG, MICRO CONPUTER)
NC
NC
DET_EP
DET_HP
5V1
LED
GND
KEY2
KEY1
GND
RMT_OUT
GND
5V1
TM_LEVEL
16P-1.5FJN-S
LA22
TEM2130AM
LA17 TEM2121AM
LA18 TEM2121M
LA04 TEM2121M
LA13 TEM2121M
LA12 TEM2121M
LA01 TEM2121M
LA19 TEM2121M
LA20 TEM2121M
LA03 TEM2121M
LA21 TEM2121M
DET_EP
DET_HP
LED
KEY2
KEY1
RMT_OUT
IR_IN
TM_LEVEL
POWER_DEG
DETECT_SW
006:8C
006:8C
007:7A
005:1B
005:1A
008:8C
005:1D
005:1C
006:8C:034:7C
006:8D
34HFX84
Connector (1/3)
SHEET-1/3
SH. NO.
34

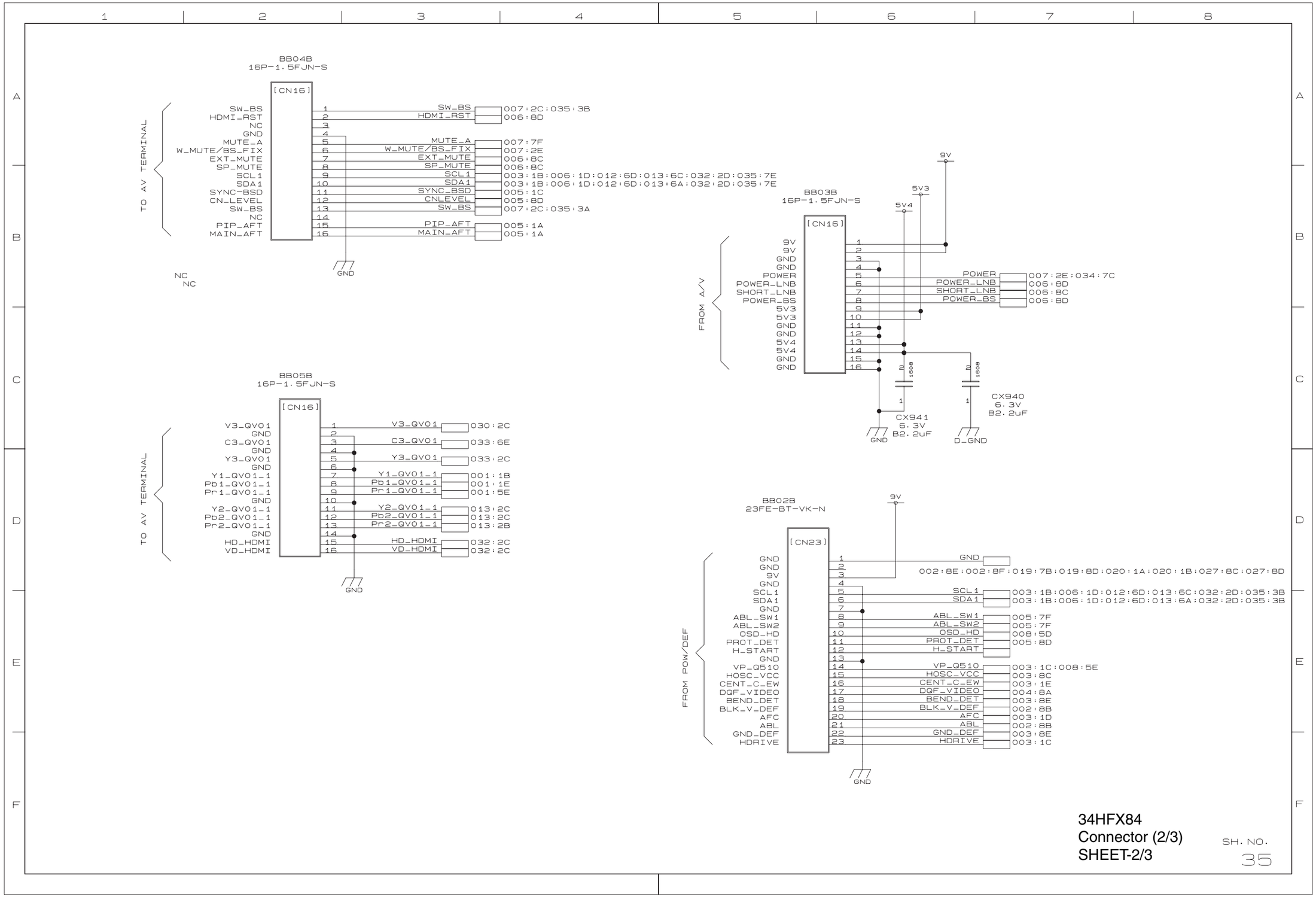
BB04B
16P-1.5FJN-S
[CN16]
TO AV TERMINAL
SW_BS 1 SW_BS 007:2C:035:3B
HDMI_RST 2 HDMI_RST 006:8D
NC 3
GND 4
MUTE_A 5 MUTE_A 007:7F
W_MUTE/BS_FIX 6 W_MUTE/BS_FIX 007:2E
EXT_MUTE 7 EXT_MUTE 006:8C
SP_MUTE 8 SP_MUTE 006:8C
SCL1 9 SCL1 003:1B:006:1D:012:6D:013:6C:032:2D:035:7E
SDA1 10 SDA1 003:1B:006:1D:012:6D:013:6A:032:2D:035:7E
SYNC-BSD 11 SYNC_BSD 005:1C
CN_LEVEL 12 CNLEVEL 005:8D
SW_BS 13 SW_BS 007:2C:035:3A
NC 14
PIP_AFT 15 PIP_AFT 005:1A
MAIN_AFT 16 MAIN_AFT 005:1A
GND
NC
NC
BB03B
16P-1.5FJN-S
[CN16]
FROM A/V
9V 1
9V 2
GND 3
GND 4
POWER 5 POWER 007:2E:034:7C
POWER_LNB 6 POWER_LNB 006:8D
SHORT_LNB 7 SHORT_LNB 006:8C
POWER_BS 8 POWER_BS 006:8D
5V3 9
5V3 10
GND 11
GND 12
5V4 13
5V4 14
GND 15
GND 16
9V
5V3
5V4
2
1608
1
CX941
6.3V
B2.2uF
GND
2
1608
1
CX940
6.3V
B2.2uF
D_GND
BB05B
16P-1.5FJN-S
[CN16]
TO AV TERMINAL
V3_QVO1 1 V3_QVO1 030:2C
GND 2
C3_QVO1 3 C3_QVO1 033:6E
GND 4
Y3_QVO1 5 Y3_QVO1 033:2C
GND 6
Y1_QVO1_1 7 Y1_QVO1_1 001:1B
Pb1_QVO1_1 8 Pb1_QVO1_1 001:1E
Pr1_QVO1_1 9 Pr1_QVO1_1 001:5E
GND 10
Y2_QVO1_1 11 Y2_QVO1_1 013:2C
Pb2_QVO1_1 12 Pb2_QVO1_1 013:2C
Pr2_QVO1_1 13 Pr2_QVO1_1 013:2B
GND 14
HD_HDMI 15 HD_HDMI 032:2C
VD_HDMI 16 VD_HDMI 032:2C
GND
BB02B
23FE-BT-VK-N
9V
[CN23]
FROM POW/DEF
GND 1 GND
GND 2
9V 3 002:8E:002:8F:019:7B:019:8D:020:1A:020:1B:027:8C:027:8D
GND 4
SCL1 5 SCL1 003:1B:006:1D:012:6D:013:6C:032:2D:035:3B
SDA1 6 SDA1 003:1B:006:1D:012:6D:013:6A:032:2D:035:3B
GND 7
ABL_SW1 8 ABL_SW1 005:7F
ABL_SW2 9 ABL_SW2 005:7F
OSD_HD 10 OSD_HD 008:5D
PROT_DET 11 PROT_DET 005:8D
H_START 12 H_START
GND 13
VP_Q510 14 VP_Q510 003:1C:008:5E
HOSC_VCC 15 HOSC_VCC 003:8C
CENT_C_EW 16 CENT_C_EW 003:1E
DQF_VIDEO 17 DQF_VIDEO 004:8A
BEND_DET 18 BEND_DET 003:8E
BLK_V_DEF 19 BLK_V_DEF 002:8B
AFC 20 AFC 003:1D
ABL 21 ABL 002:8B
GND_DEF 22 GND_DEF 003:8E
HDRIVE 23 HDRIVE 003:1C
GND
34HFX84
Connector (2/3)
SHEET-2/3
SH. NO.
35

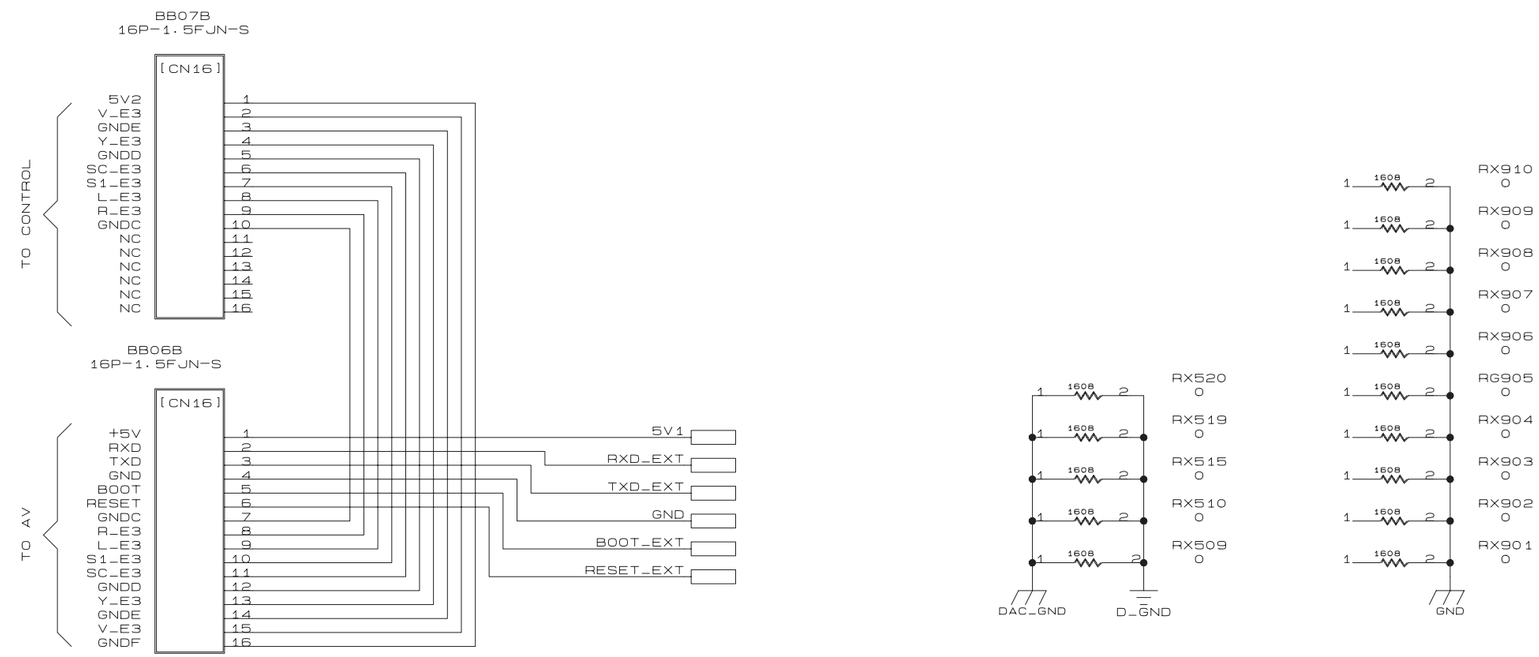

34HFX84
Connector (3/3)
SHEET-3/3

SH. NO.
36

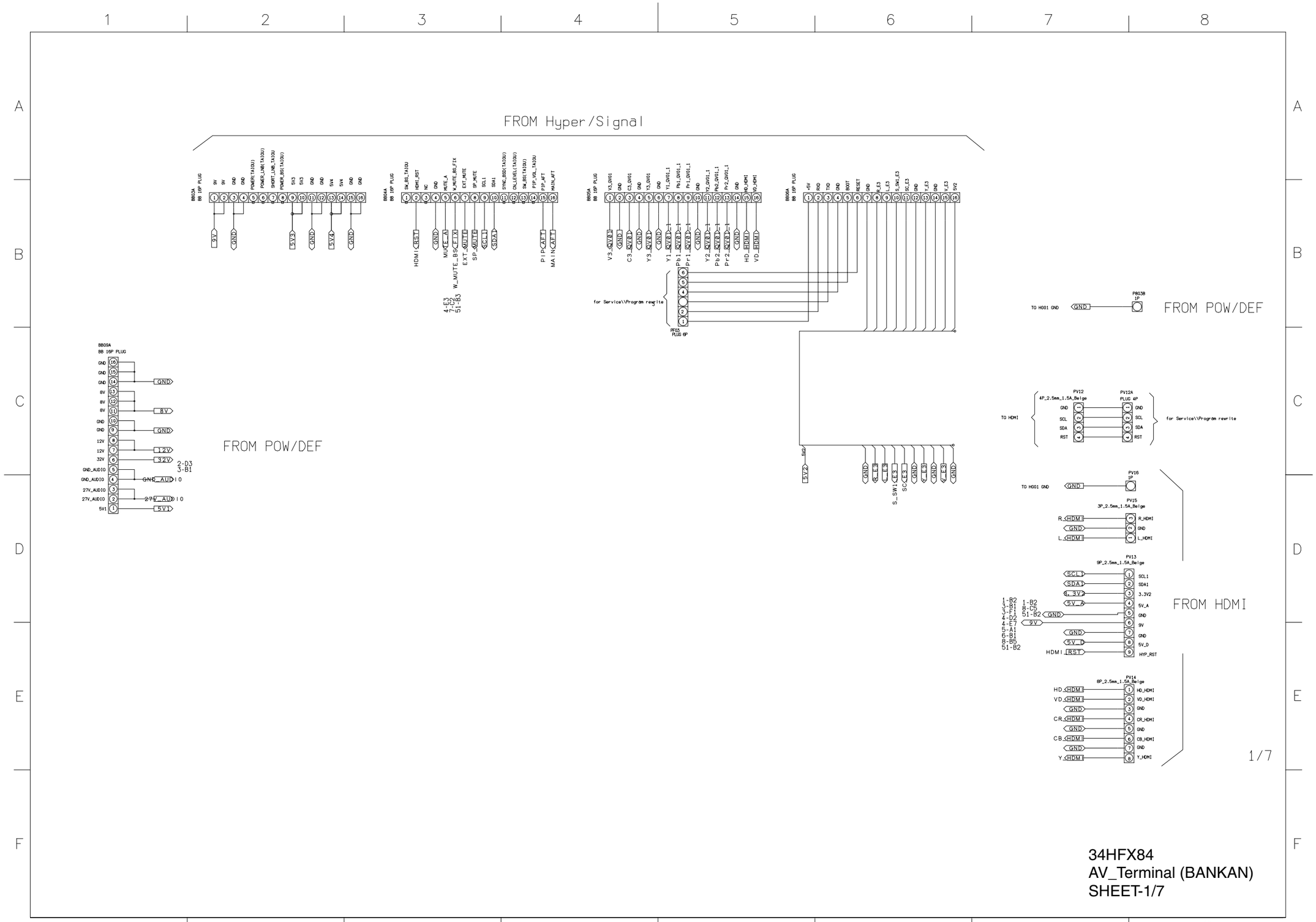
FROM Hyper/Signal
FROM POW/DEF
FROM POW/DEF
FROM HDMI
for Service\\Program rewrite
TO HDMI
TO H001 GND
TO H001 GND
1/7
34HFX84
AV_Terminal (BANKAN)
SHEET-1/7

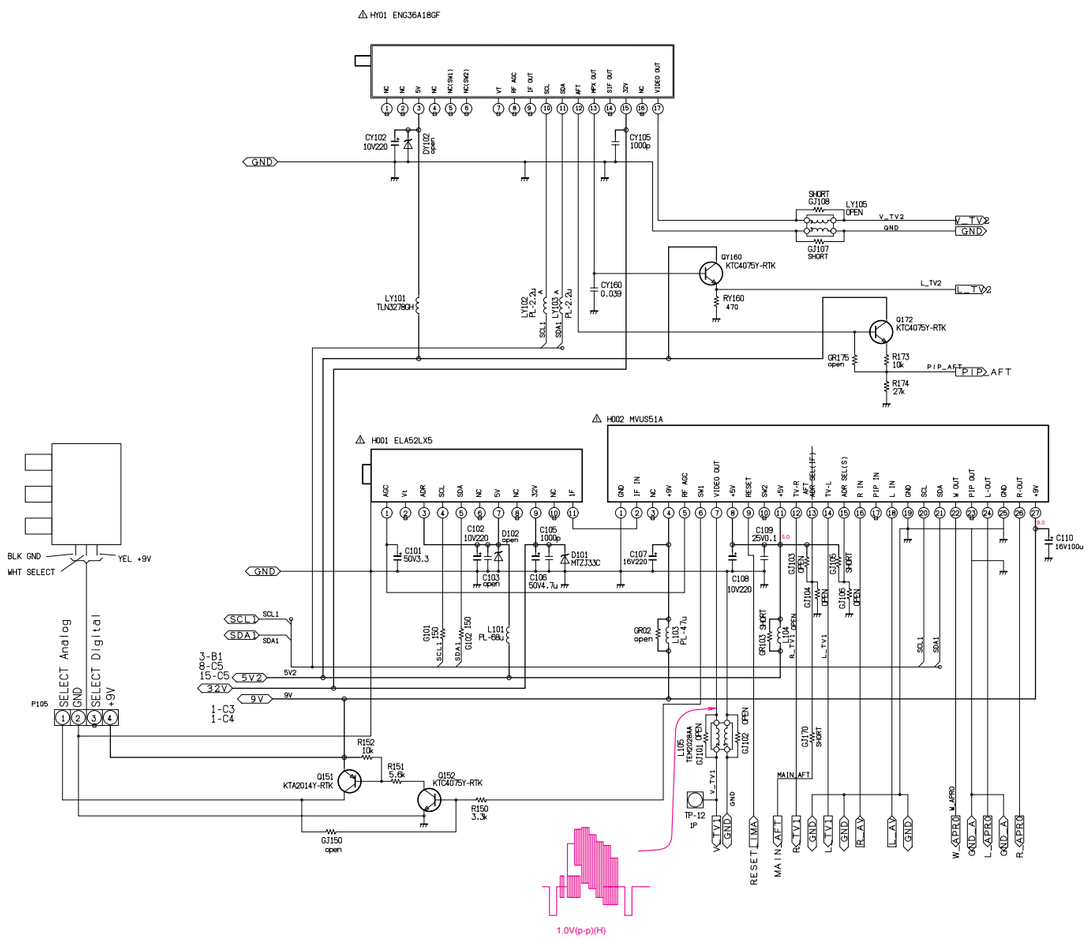
HY01 ENG36A18GF
HD01 ELA52LX5
HD02 MVUS51A
GND
SCL1
SDA1
5V2
9V
3.2V
BLK GND
WHT SELECT
YEL +9V
SELECT Analog
GND
SELECT Digital
+9V
P105
1.0V(p-p)(H)
34HFX84
AV_Terminal (Tuner/IF_TIF)
SHEET-2/7

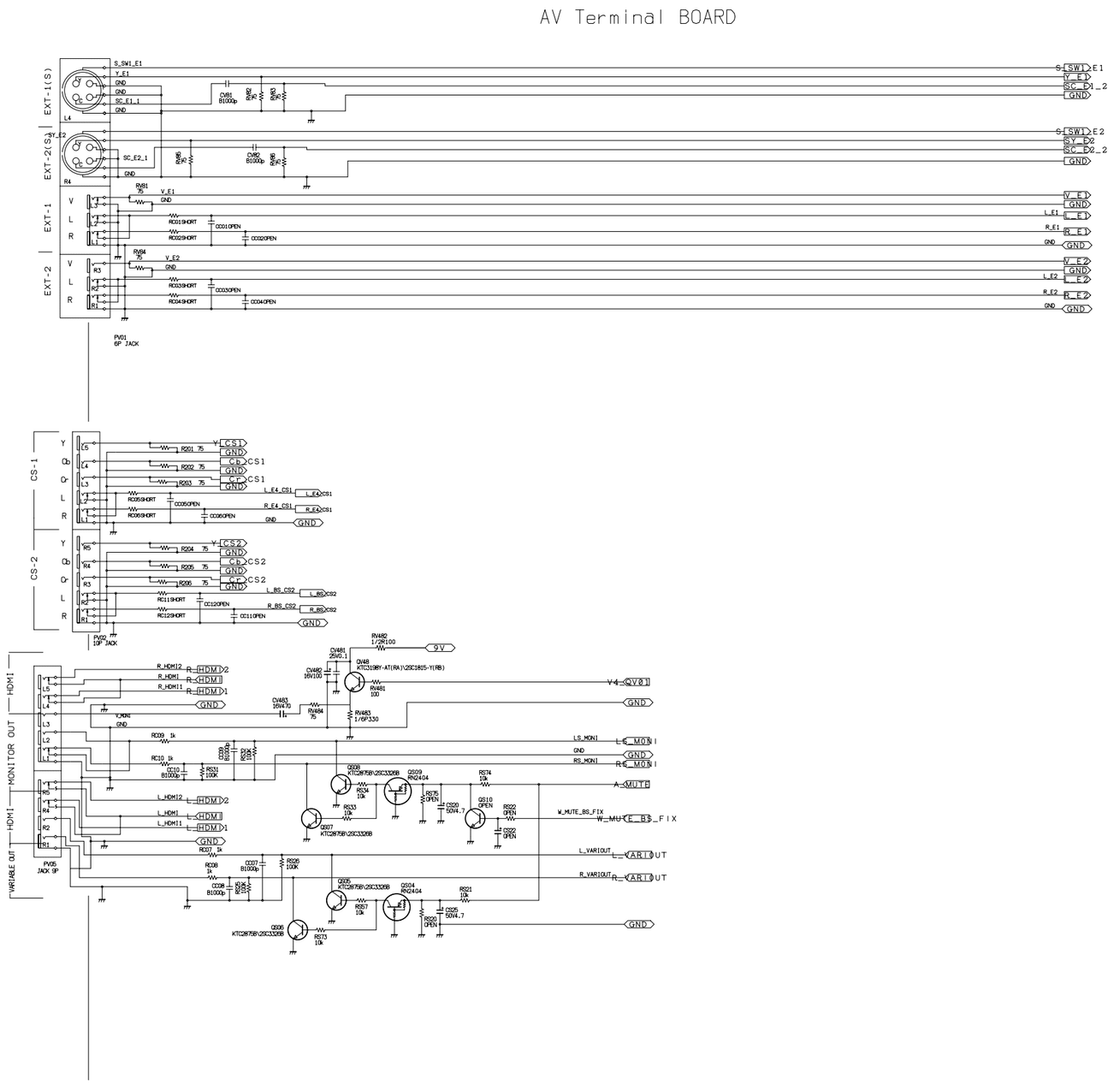

34HFX84
AV_Terminal (JACK)
SHEET-3/7

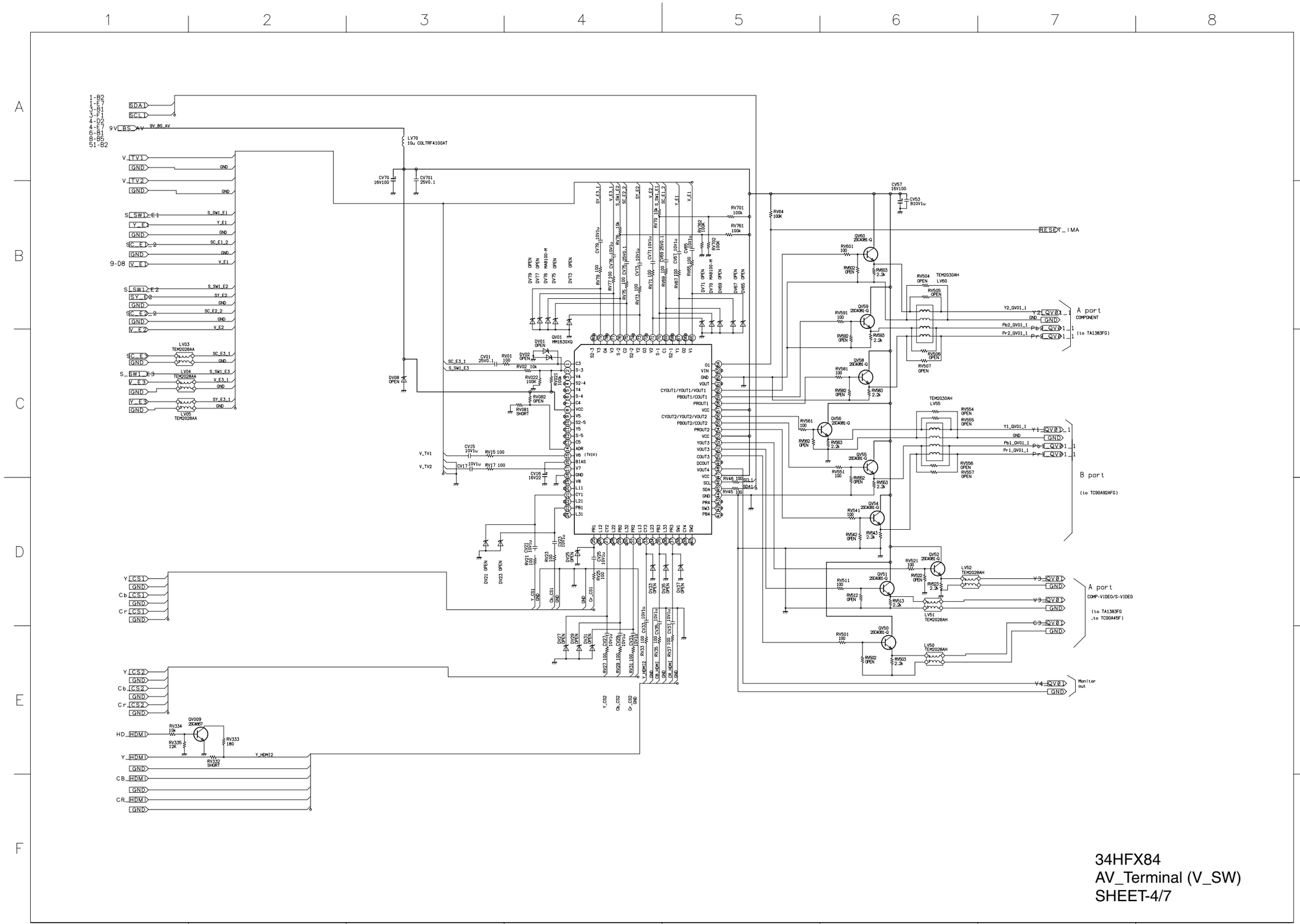
34HFX84
AV_Terminal (V_SW)
SHEET-4/7
A port
COMPONENT
(to TA1383FG)
B port
(to TC90A92AFG)
A port
COMP-VIDEO/S-VIDEO
(to TA1383FG
,to TC90A45F)
Monitor out
RESET_IMA

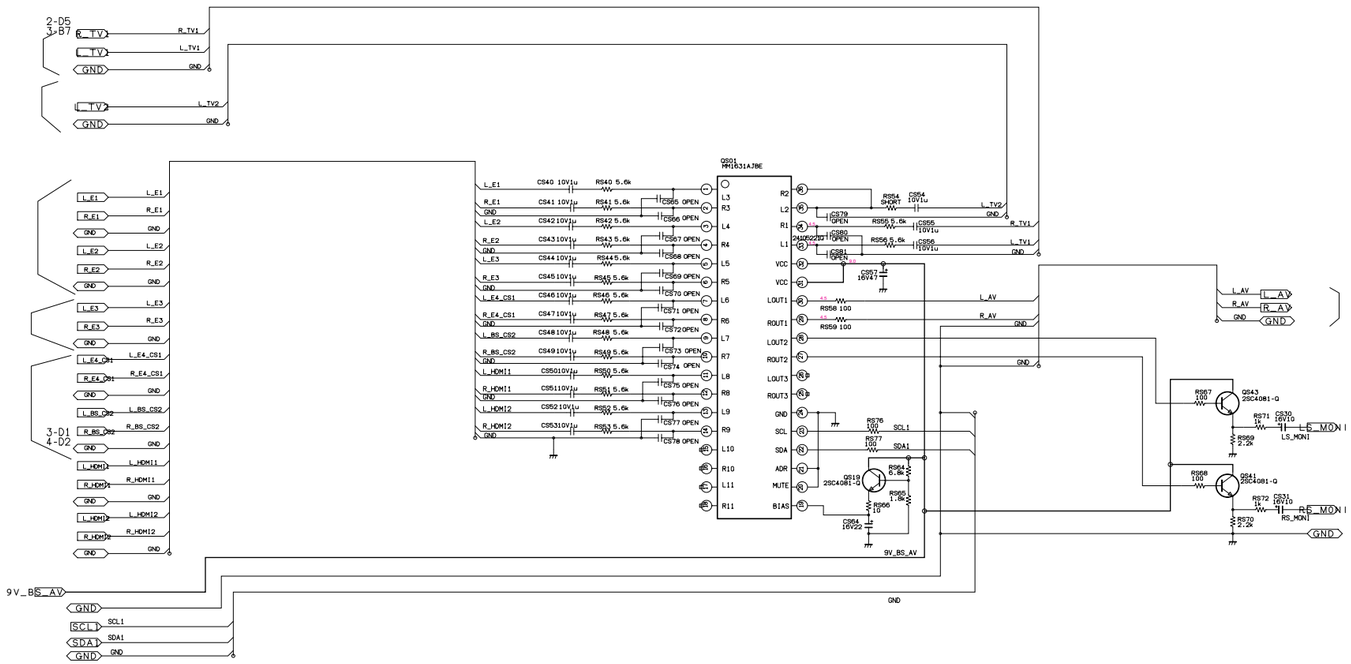

34HFX84
AV_Terminal (A_SW)
SHEET-5/7

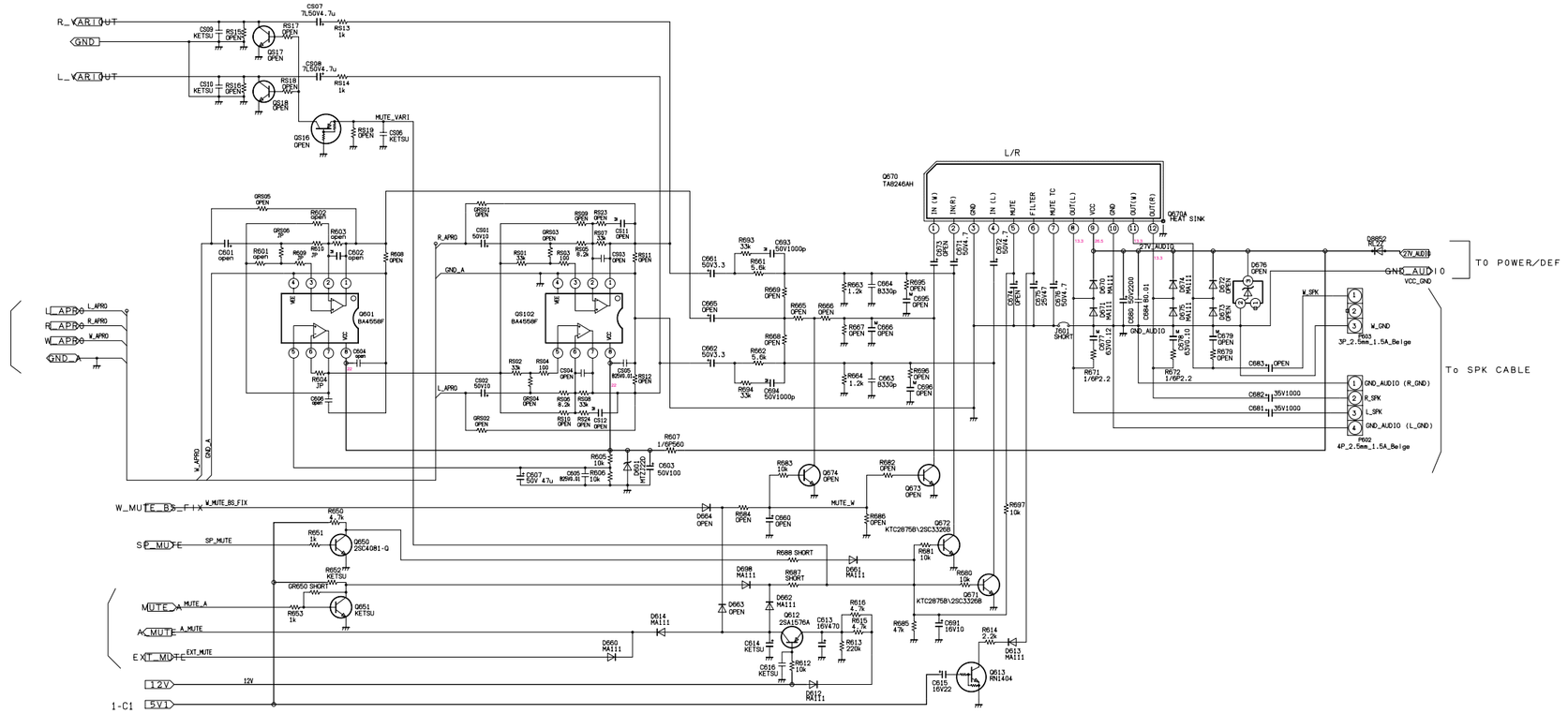

34HFX84
AV_Terminal (AUDIO_OUT)
SHEET-6/7

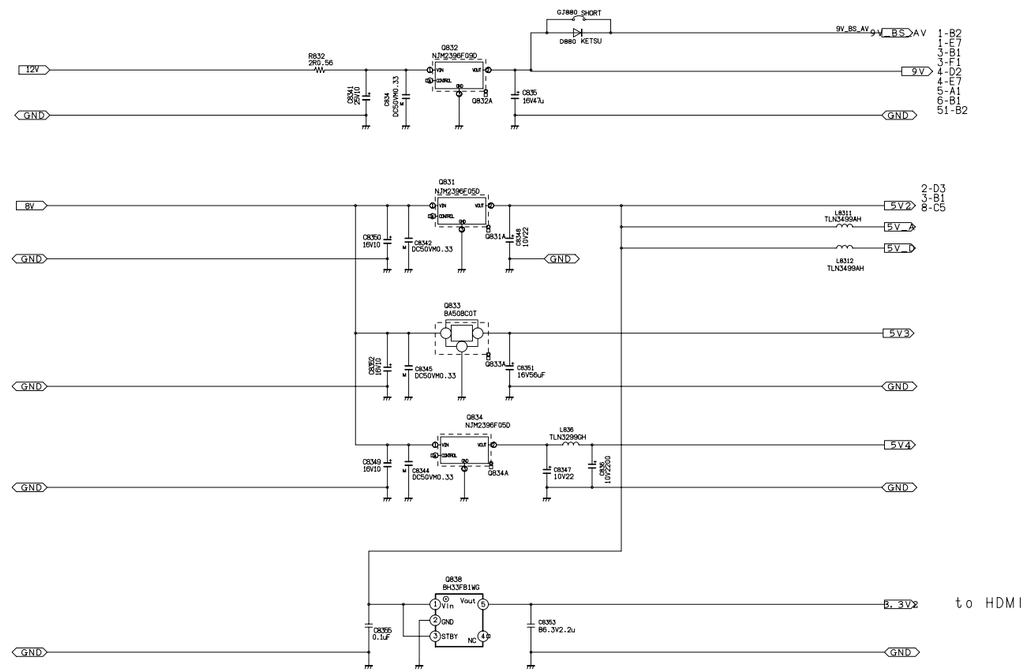

34HFX84
AV_Terminal (REG)
SHEET-7/7

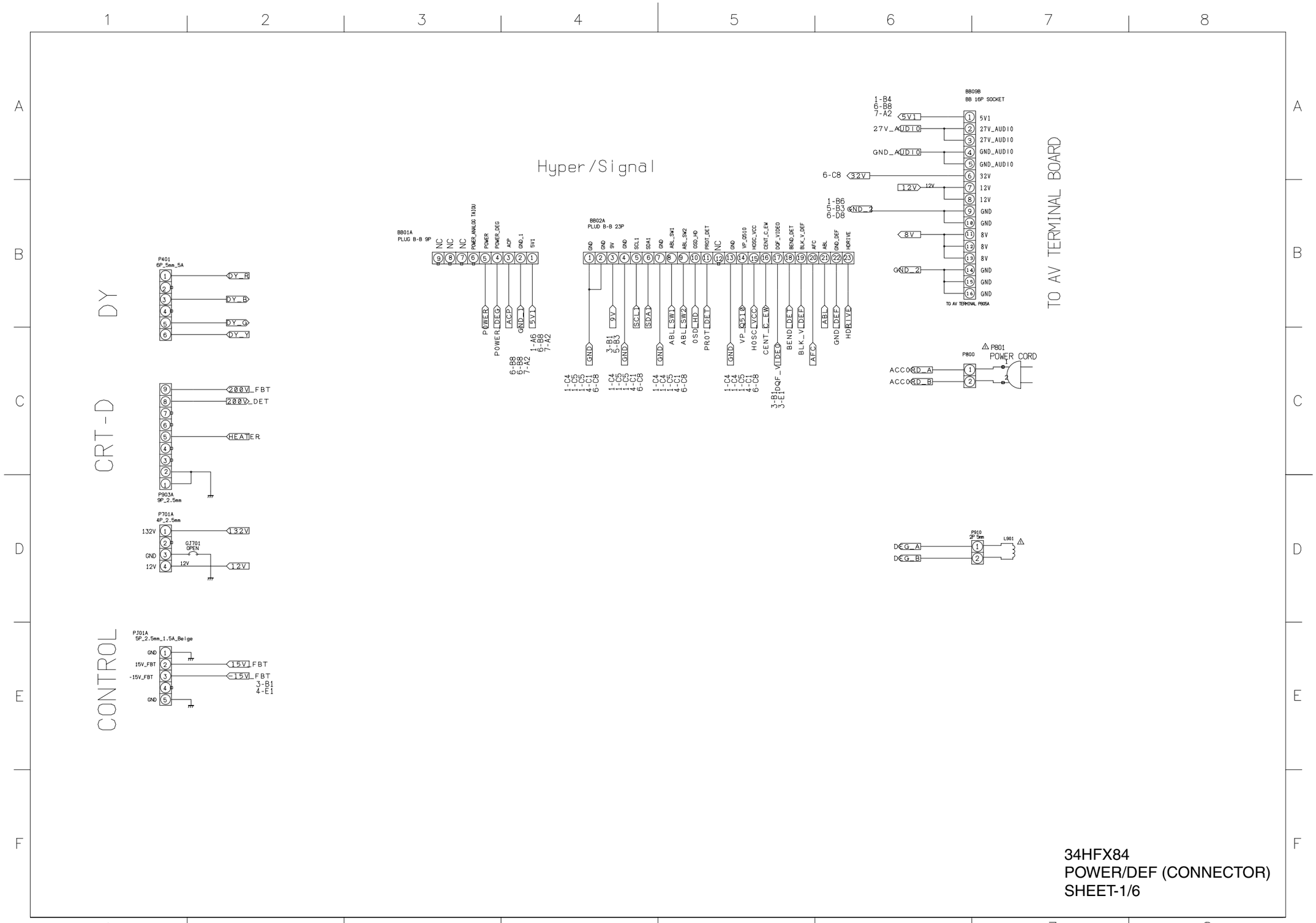

34HFX84
POWER/DEF (CONNECTOR)
SHEET-1/6

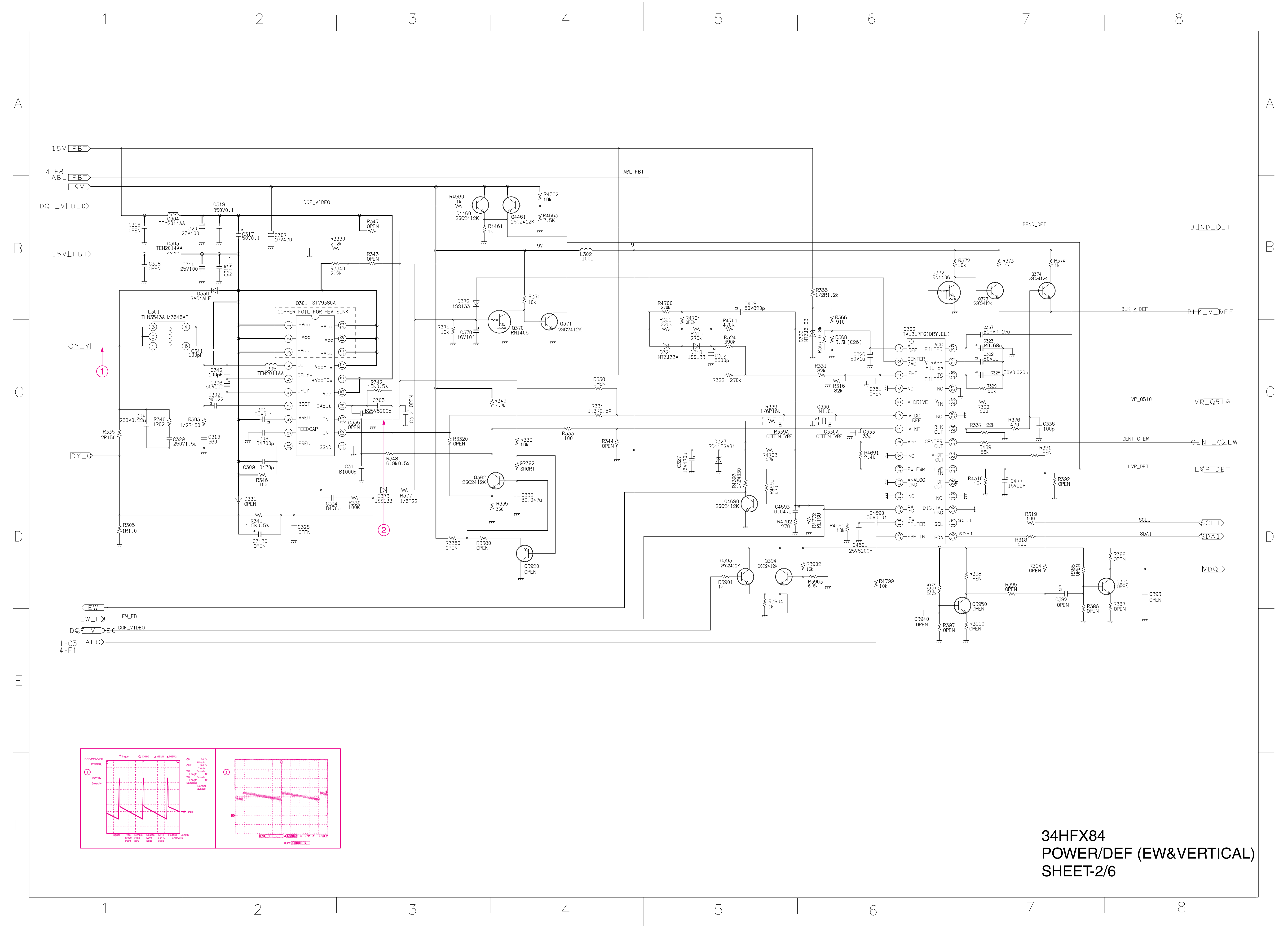

34HFX84
POWER/DEF (EW&VERTICAL)
SHEET-2/6

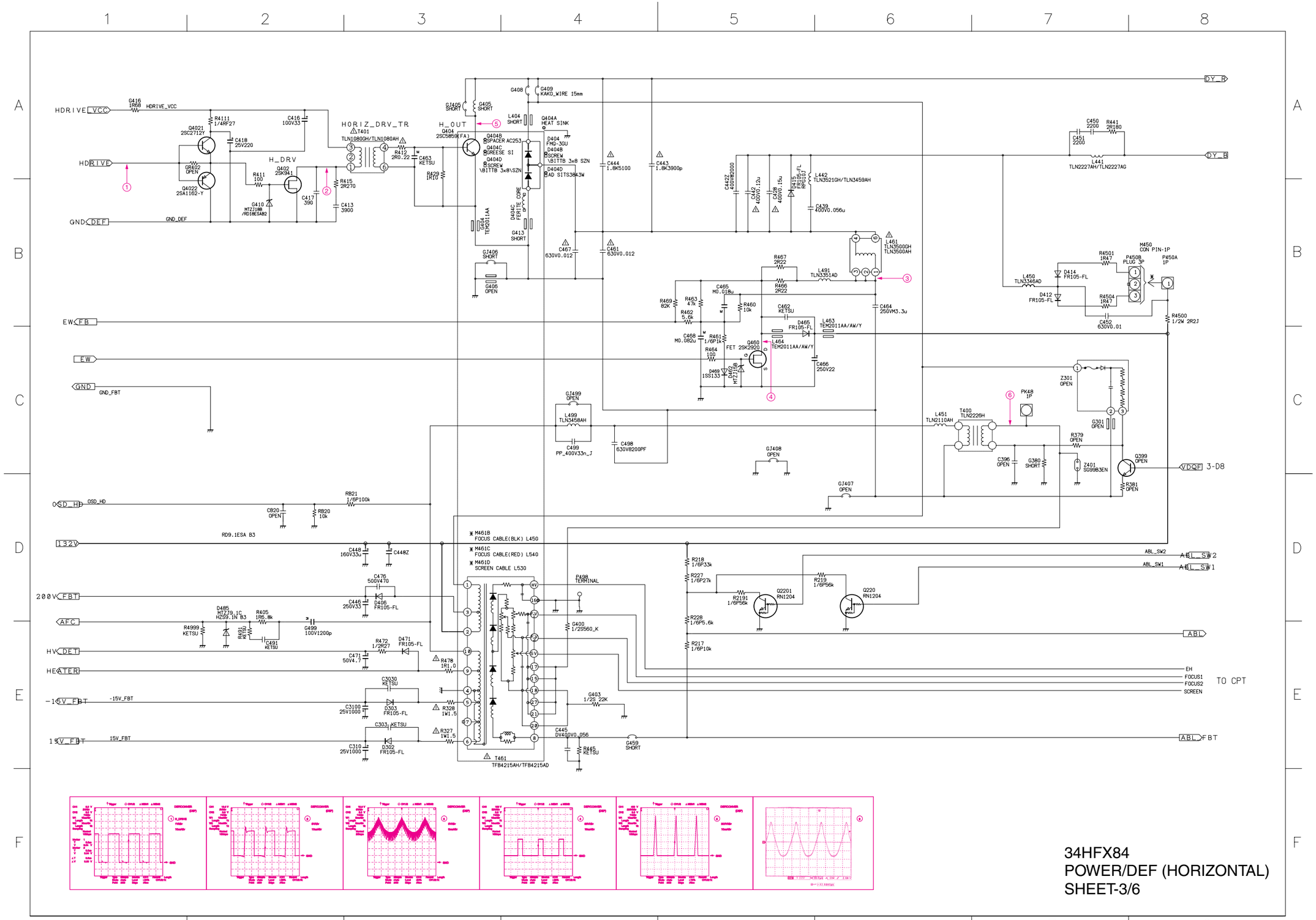

34HFX84
POWER/DEF (HORIZONTAL)
SHEET-3/6

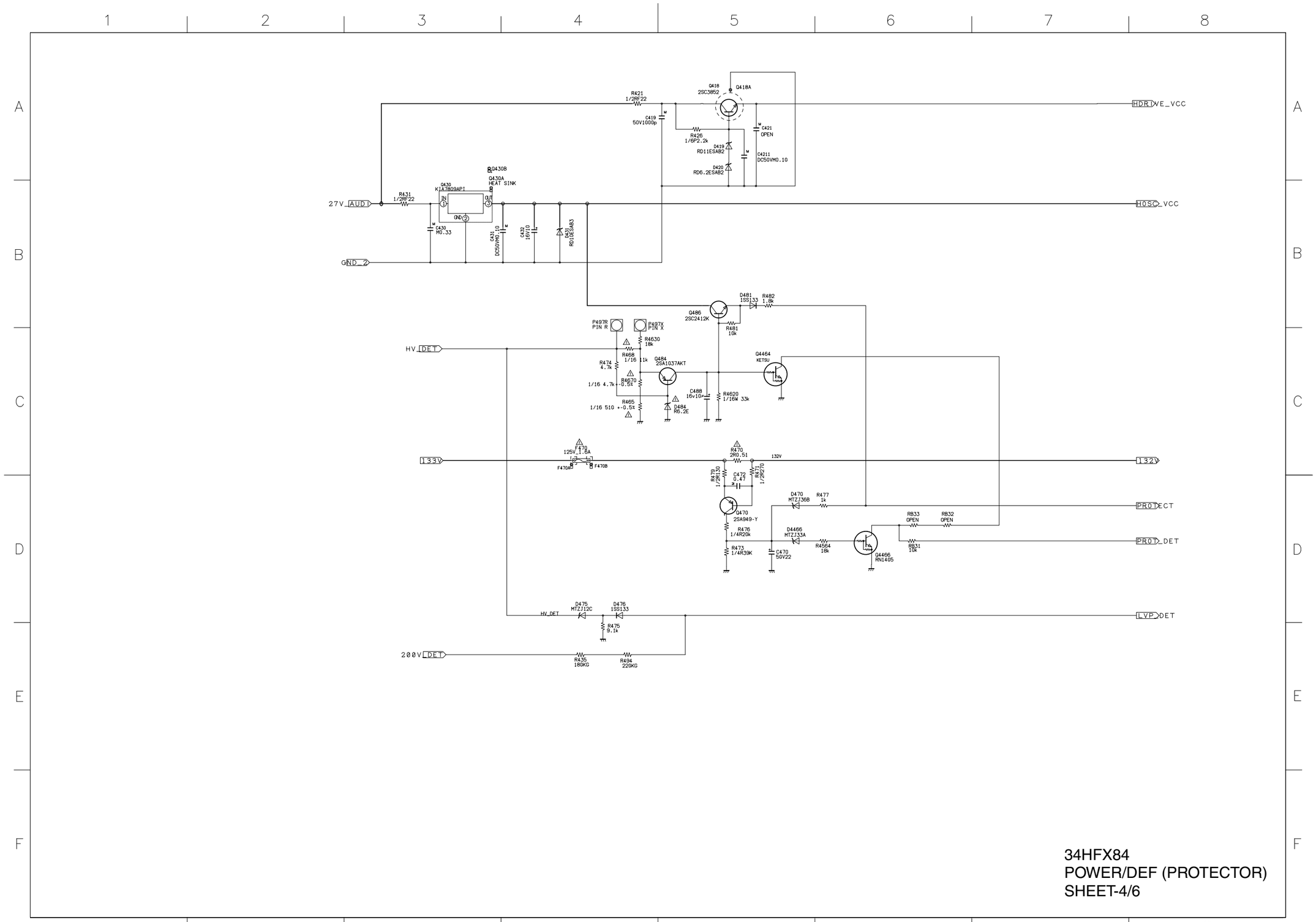

34HFX84
POWER/DEF (PROTECTOR)
SHEET-4/6

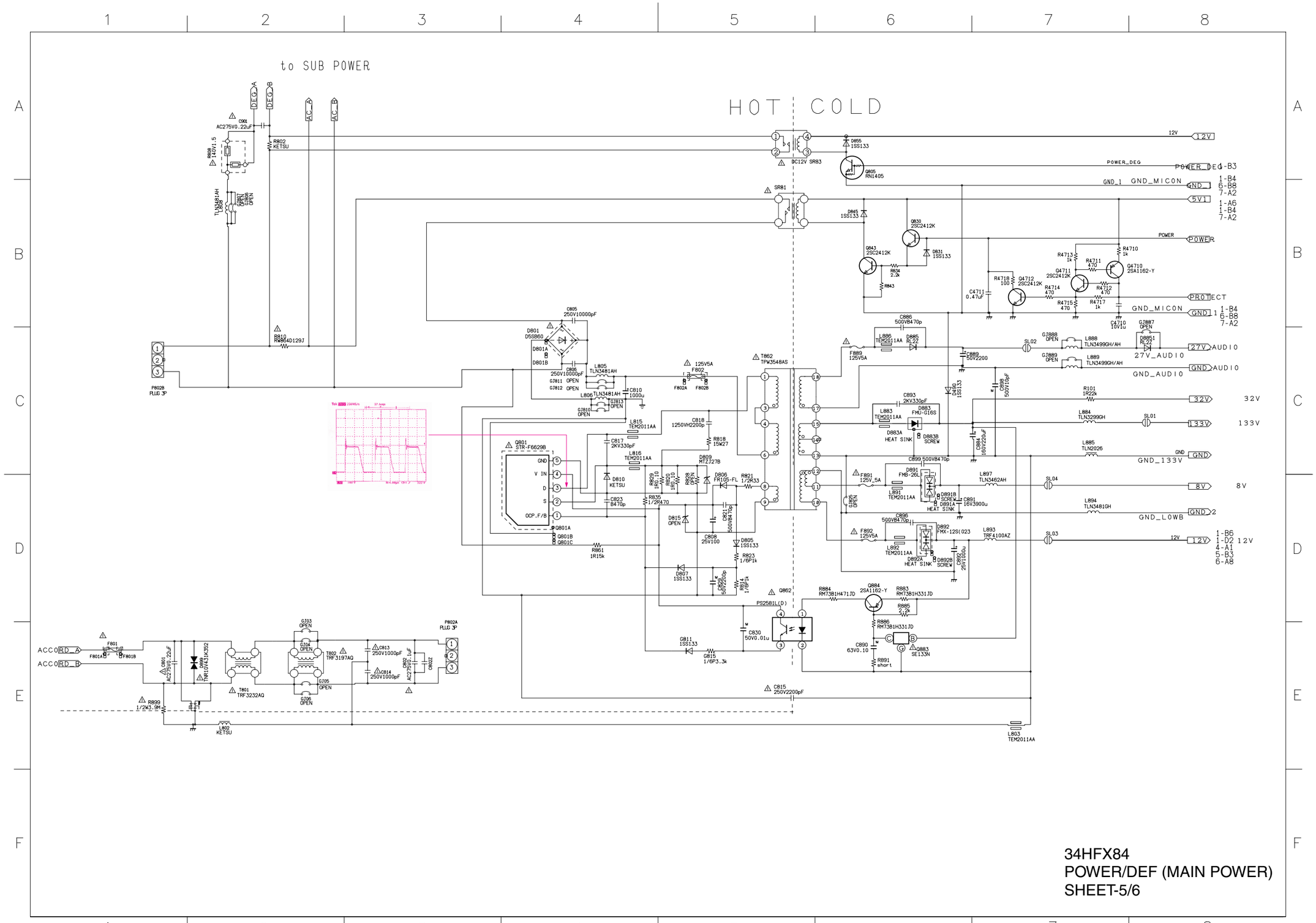

34HFX84
POWER/DEF (MAIN POWER)
SHEET-5/6

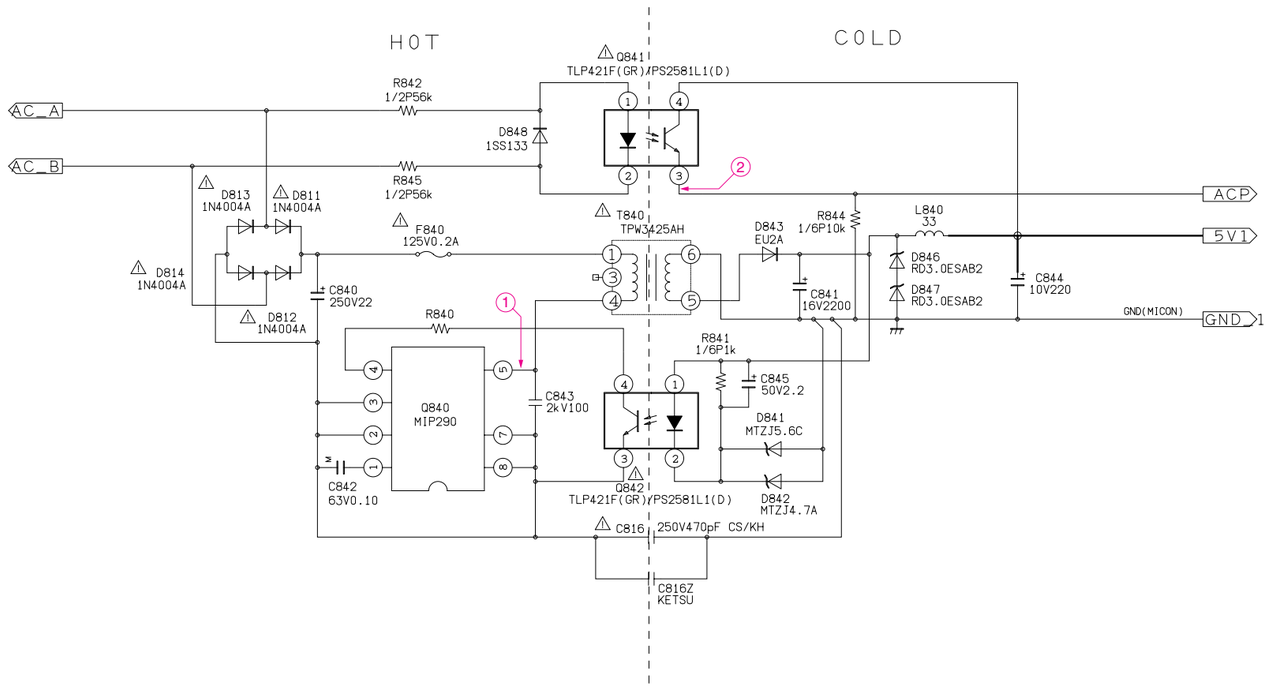

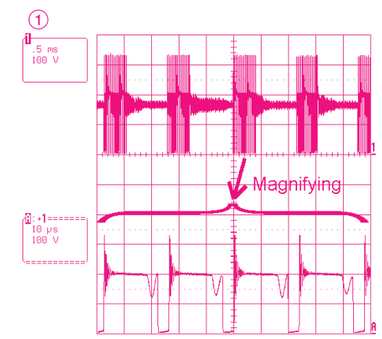

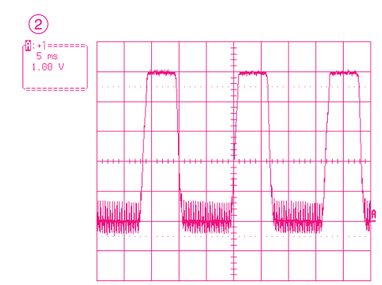

34HFX84
POWER/DEF (SUB POWER)
SHEET-6/6

U901 CRT-D SVM UNIT PD1816

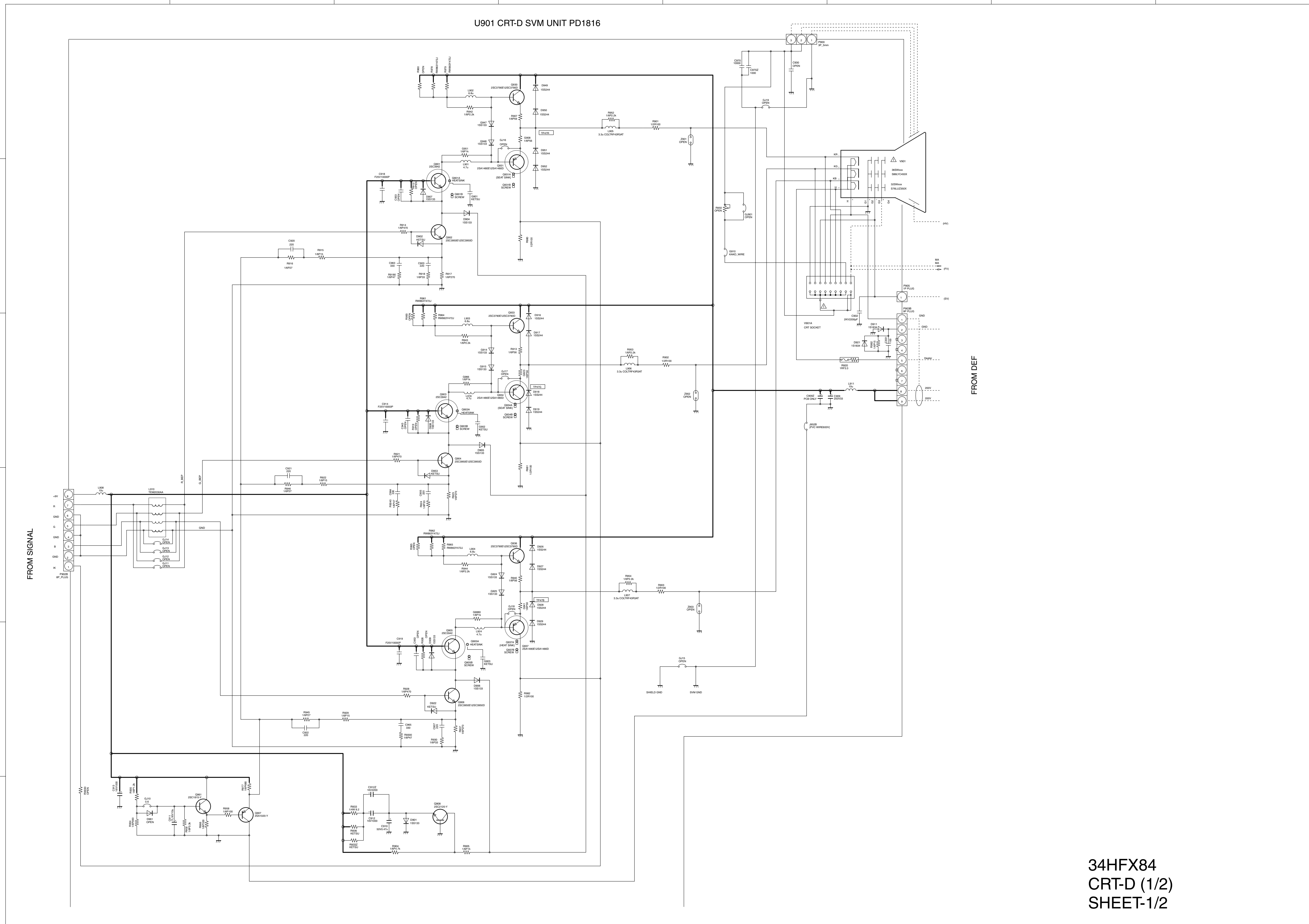

34HFX84
CRT-D (1/2)
SHEET-1/2

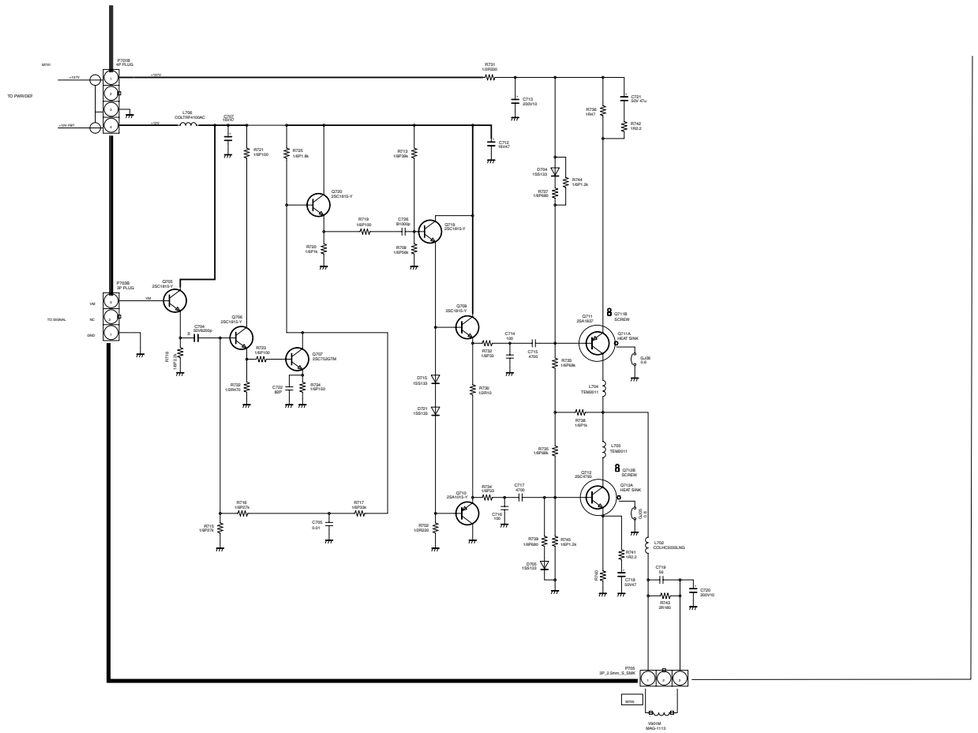

34HFX84
CRT-D (2/2)
SHEET-2/2

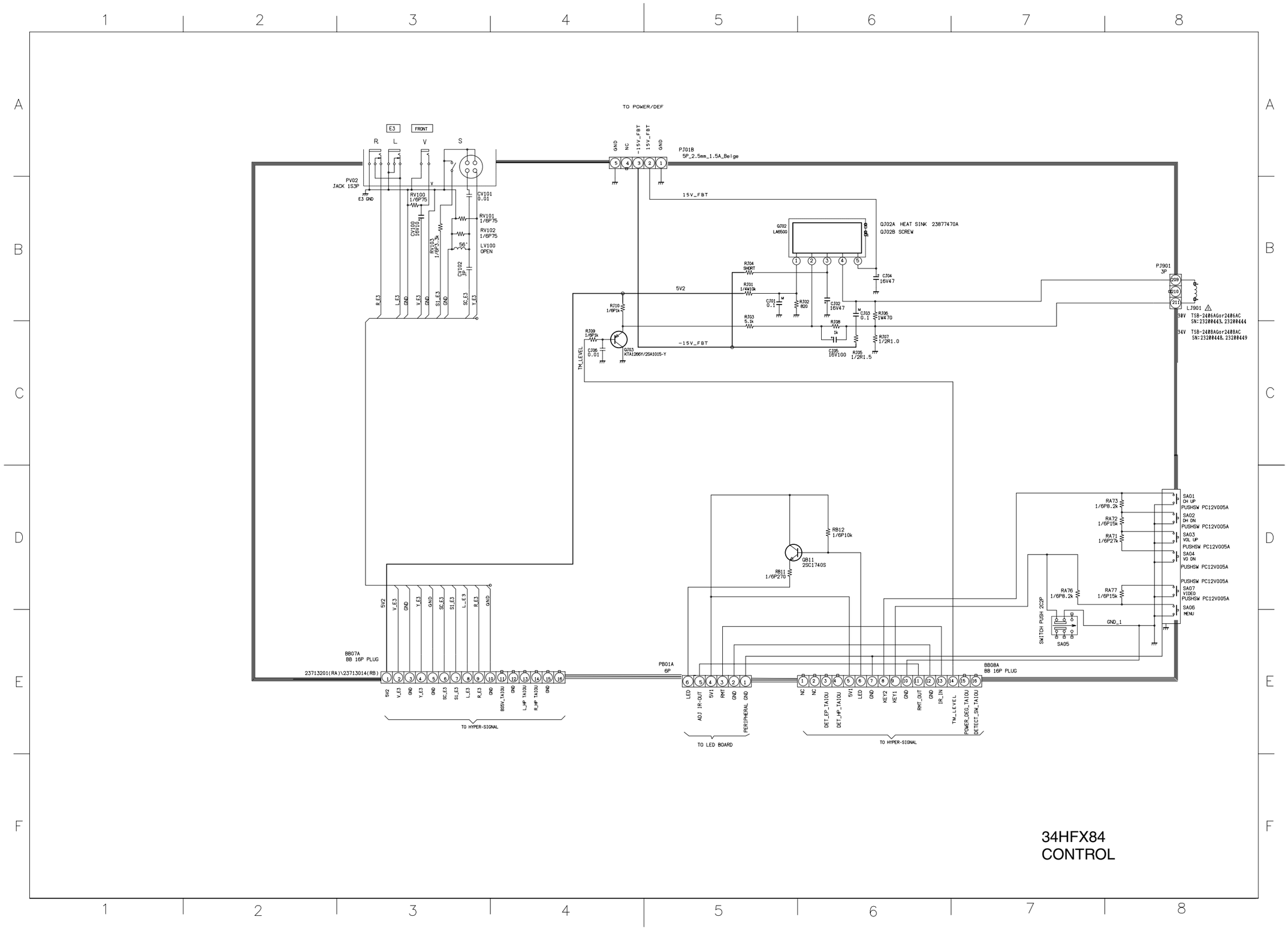

34HFX84
CONTROL

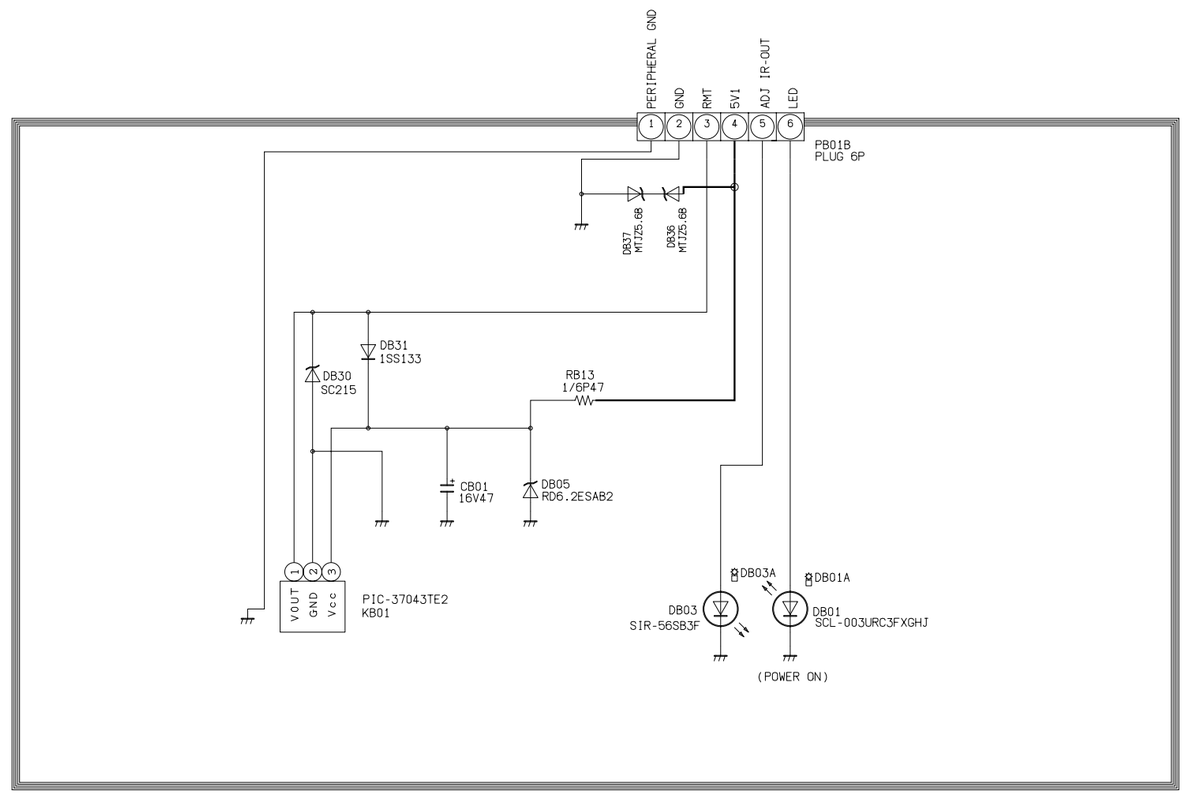
PERIPHERAL GND
GND
RMT
5V1
ADJ IR-OUT
LED
1
2
3
4
5
6
PB01B
PLUG 6P
DB37
MTZ5.6B
DB36
MTZ5.6B
DB31
1SS133
DB30
SC215
RB13
1/6P47
CB01
16V47
DB05
RD6.2ESAB2
VOUT
GND
Vcc
PIC-37043TE2
KB01
DB03A
DB01A
DB03
SIR-56SB3F
DB01
SCL-003URC3FXGHJ
(POWER ON)

34HFX84
LED

TOSHIBA CORPORATION
1-1, SHIBAURA 1-CHOME, MINATO-KU, TOKYO 105-8001, JAPAN